CUCFL 204C ASAHI

Ball bearing units

TYPE: Housing units, Two-bolt flanged housing units, Cast iron housing, Radial insert ball bearing with grub screws in inner ring, Type CUCFL..C with cast iron covers, open cover (ASAHI)

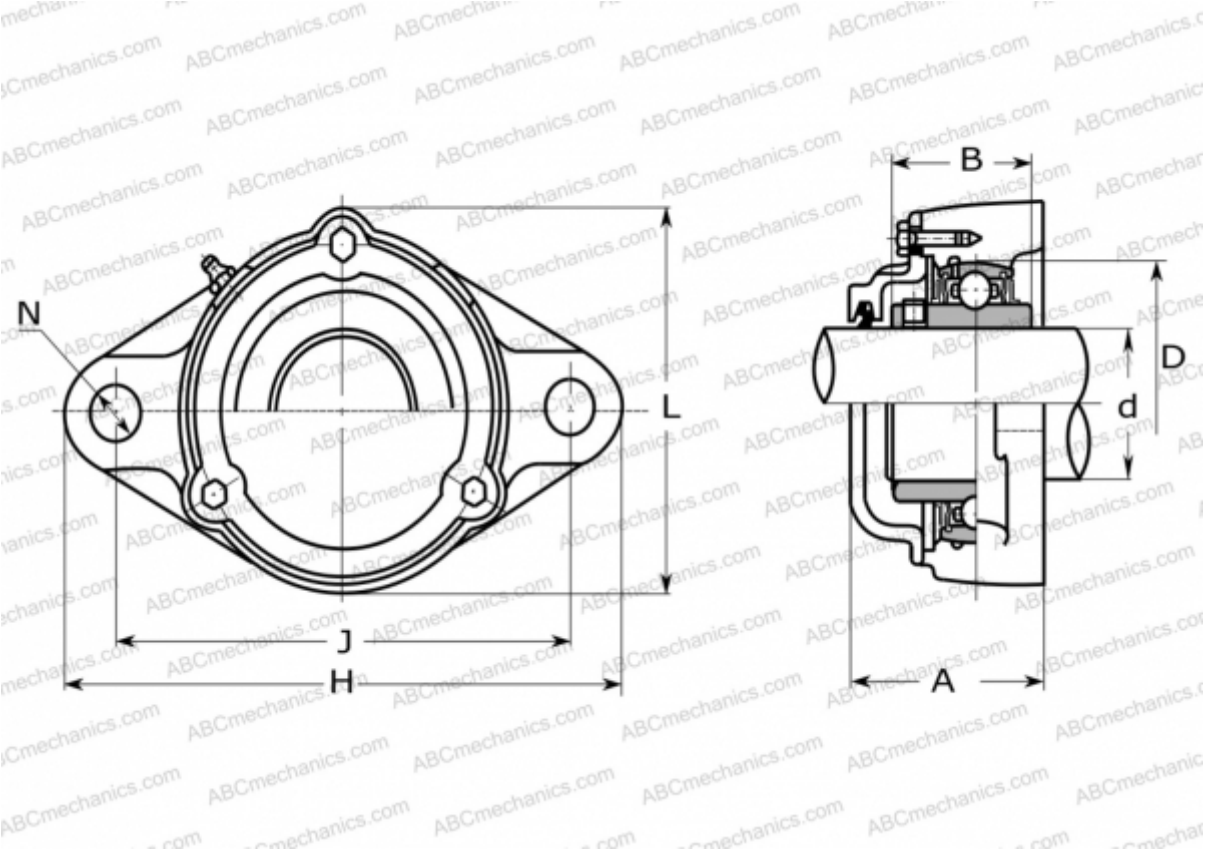

Technical specification

DIMENSIONS, MM	
d	20,000
D	47,000
B	31,000
L	66,000
H	113,000
A	46,000
J	90,000
N	12,000
WEIGHT, KG	0,800
Bearing	UC 204
Housing	CFL 204

MANUFACTURER	ASAHI