CUCFL 209C ASAHI

Ball bearing units

TYPE: Housing units, Two-bolt flanged housing units, Cast iron housing, Radial insert ball bearing with grub screws in inner ring, Type CUCFL..C with cast iron covers, open cover (ASAHI)

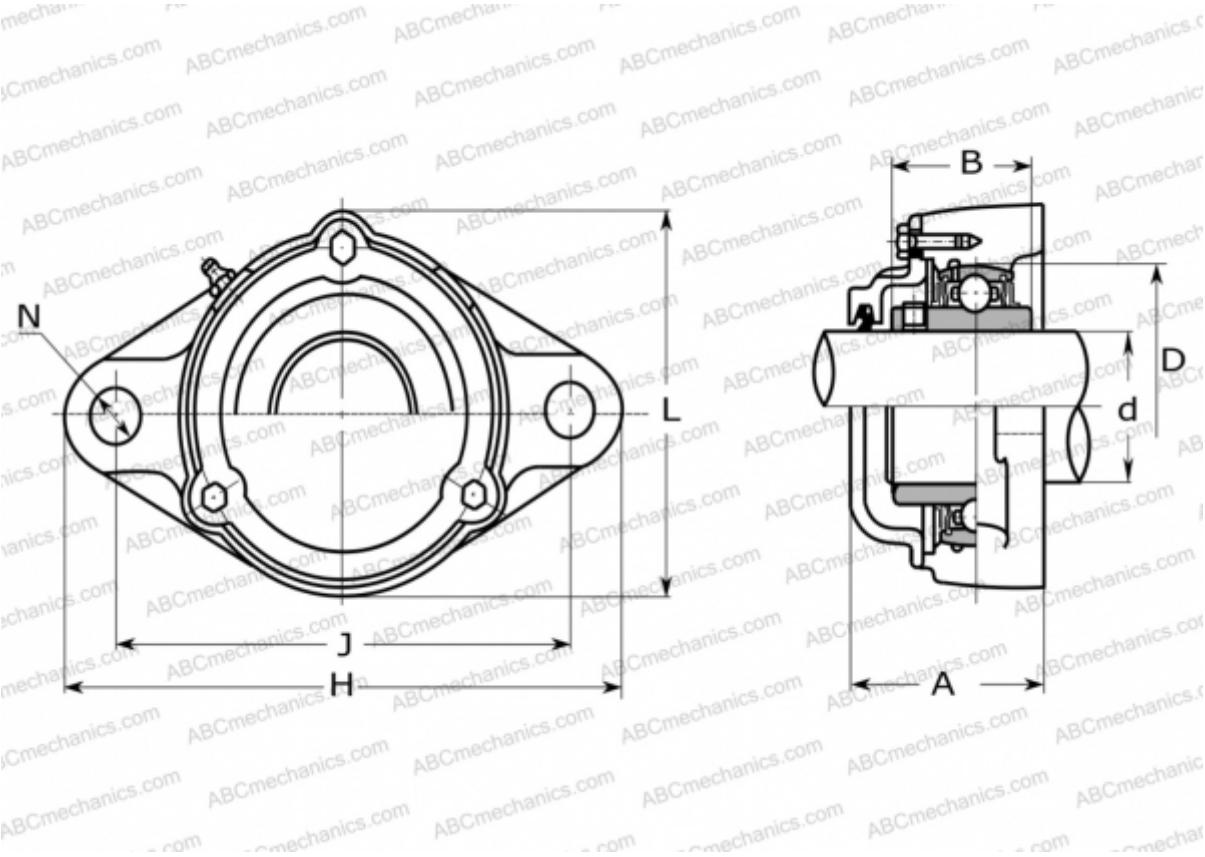

Technical specification

DIMENSIONS, MM	
d	45,000
D	85,000
B	49,200
L	113,000
H	188,000
A	67,000
J	148,000
N	19,000
WEIGHT, KG	2,700
Bearing	UC 209
Housing	CFL 209

MANUFACTURER	ASAHI