UCFL 206E ASAHI

Ball bearing units

TYPE: Housing units, Two-bolt flanged housing units, Cast iron housing, Radial insert ball bearing with grub screws in inner ring, Type UCFL..E with pressed steel covers, closed cover (ASAHI)

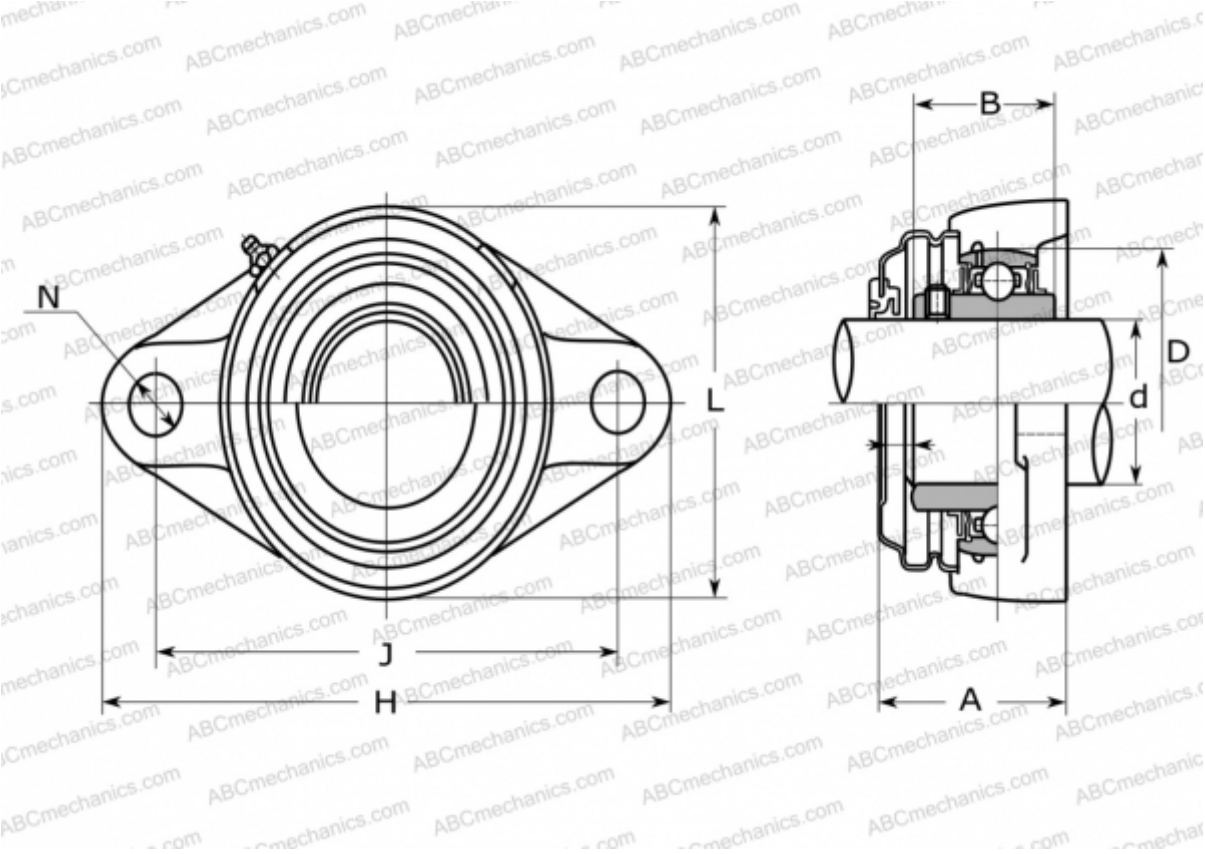

Technical specification

DIMENSIONS, MM	
d	30,000
D	62,000
B	38,100
L	80,000
H	148,000
A	49,000
J	117,000
N	16,000
WEIGHT, KG	1,000
Bearing	UC 206
Housing	FL 206C

MANUFACTURER	ASAHI