UCFK 206 ASAHI

Ball bearing units

TYPE: Housing units, Three-bolt flange bracket units, Cast iron housing, Radial insert ball bearing with grub screws in inner ring, Type UCFK (ASAHI)

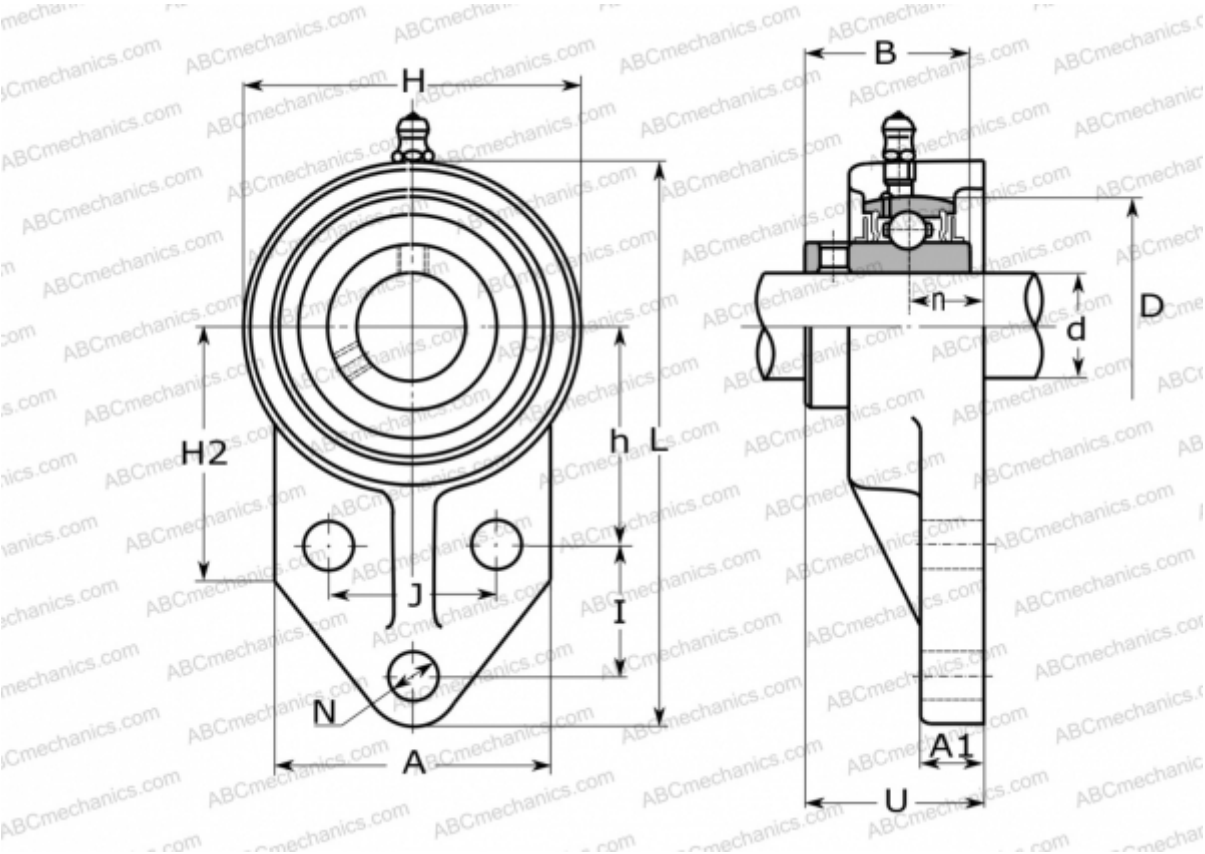

Technical specification

DIMENSIONS, MM	
d	30,000
D	62,000
B	38,100
L	130,000
H	78,000
A	65,000
H2	55,000
J	40,000
A1	13,000
N	10,000
U	40,200
I	29,000
h	50,000
n	18,000

WEIGHT, KG	0,930
Bearing	UC 206
Housing	FK 206
MANUFACTURER	ASAHI