PFD 40 TR SKF

Ball bearing units

TYPE: Housing units, Three-bolt flanged housing units, Sheet steel housing, Radial insert ball bearing with grub screws in inner ring, Type PFD..TR (SKF)

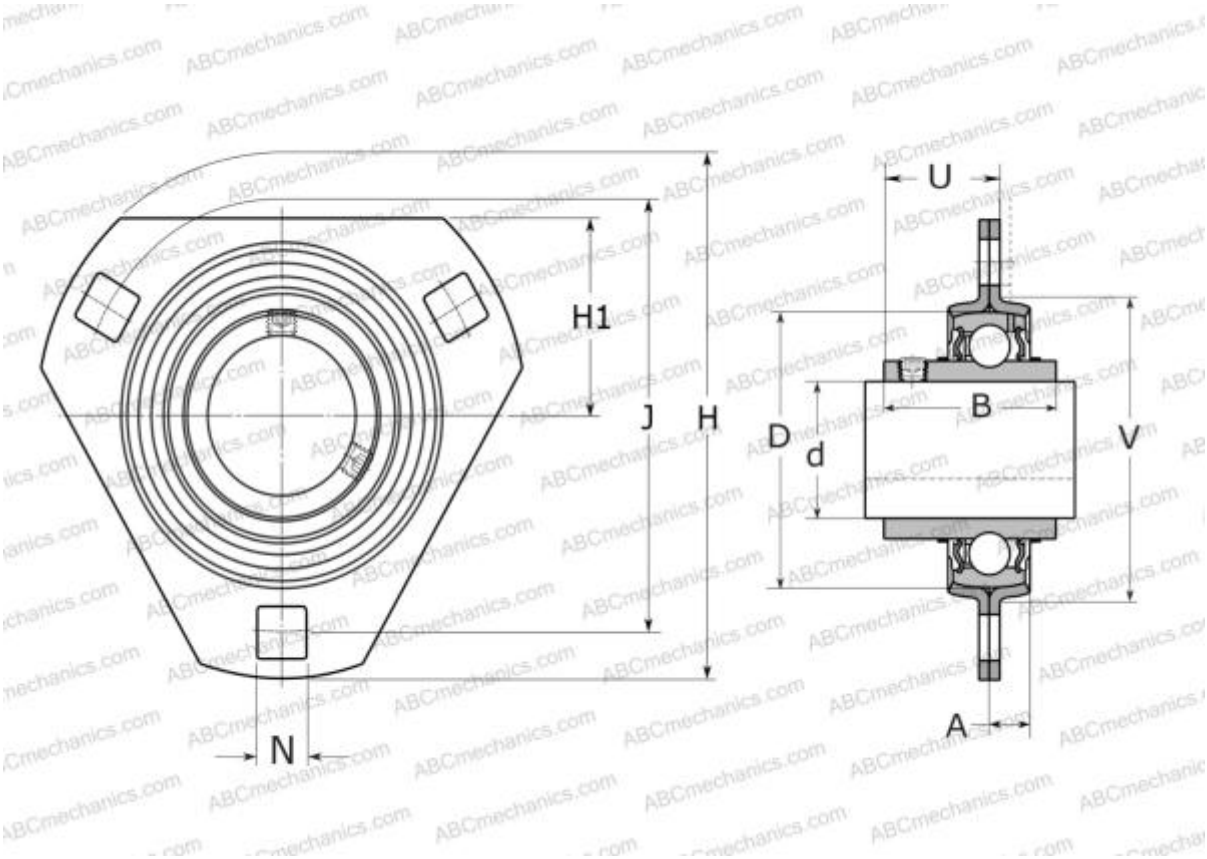

Technical specification

DIMENSIONS, MM	
d	40,000
D	80,000
B	49,200
H	148,000
A	10,000
J	119,000
H1	53,000
N	13,500
U	33,700
V	91,000
WEIGHT, KG	1,000
Bearing	YAR 208-2RF
Housing	PFD 80

MANUFACTURER	SKF

CALCULATION DATA	
Basic dynamic load rating, C	30,700 kN
Basic static load rating, Co	19,000 kN
Fatigue load limit, Pu	0,800 kN