PF 20 TR SKF

Ball bearing units

TYPE: Housing units, Three/four-bolt flanged housing units, Sheet steel housing, Radial insert ball bearing with grub screws in inner ring, Type PF..TR (SKF)

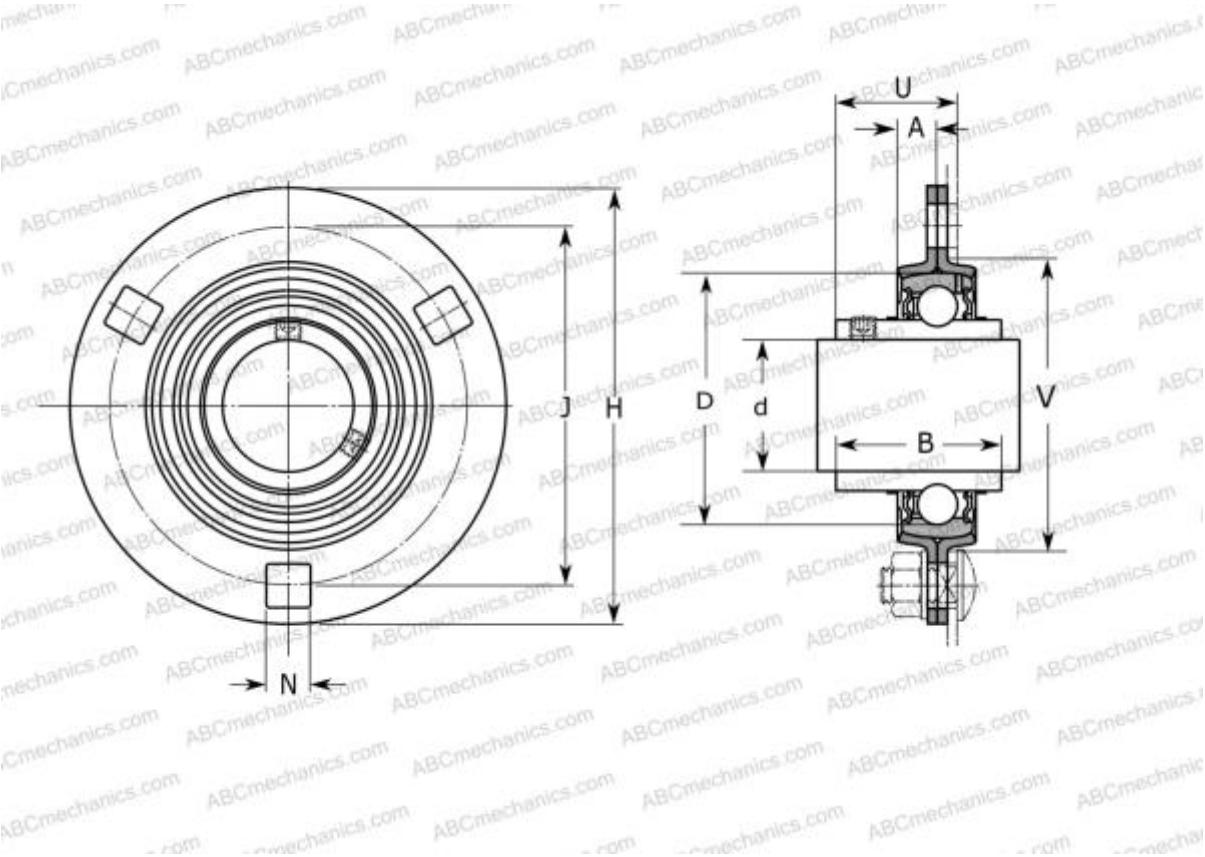

Technical specification

DIMENSIONS, MM	
d	20,000
D	47,000
B	31,000
H	91,000
A	8,000
J	71,500
N	8,700
U	20,300
V	55,000

WEIGHT, KG	0,320
Bearing	YAR 204-2RF
Housing	PF 47

MANUFACTURER	SKF

CALCULATION DATA	
Basic dynamic load rating, C	12,700 kN
Basic static load rating, Co	6,550 kN
Fatigue load limit, Pu	0,280 kN