SY 30 TF/VA228 SKF

Ball bearing units

TYPE: Housing units, Plummer block, Cast iron housing, Radial insert ball bearing with grub screws in inner ring, Type SY..TF/VA228, high temperature, for high demands (-150°/+350°) (SKF)

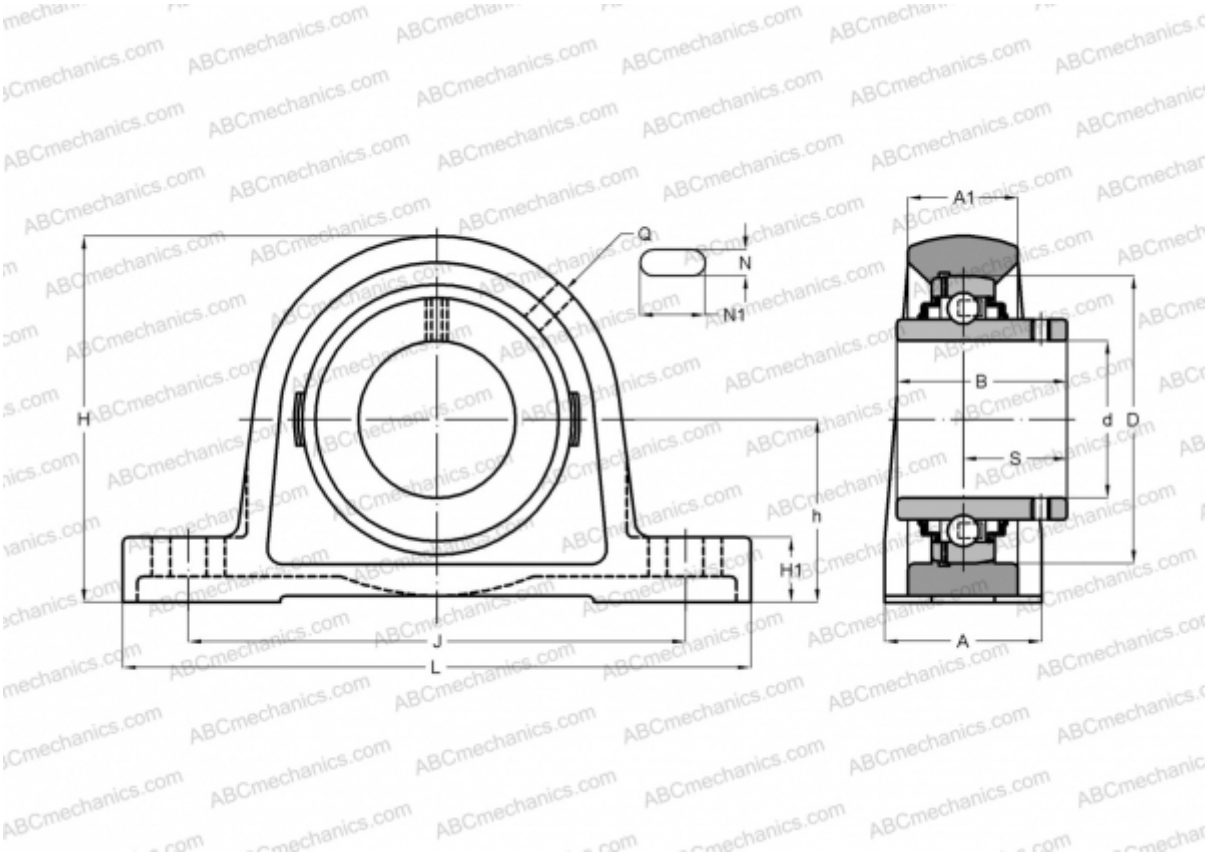

Technical specification

DIMENSIONS, MM	
d	30,000
D	62,000
B	38,100
L	152,000
H	82,000
A	40,000
J	117,500
H1	16,500
N	14,000
N1	23,500
h	42,900
WEIGHT, KG	1,100
Bearing	YAR 206-2F/VA228
Housing	SY 506 U/VA228
MANUFACTURER	SKF

CALCULATION DATA	
Basic dynamic load rating, C	19,500 kN
Basic static load rating, Co	11,200 kN
Limiting speed	190 r/min
Operating temperature max	350 °C