SY 35 TF/VA228 SKF

Ball bearing units

TYPE: Housing units, Plummer block, Cast iron housing, Radial insert ball bearing with grub screws in inner ring, Type SY..TF/VA228, high temperature, for high demands (-150°/+350°) (SKF)

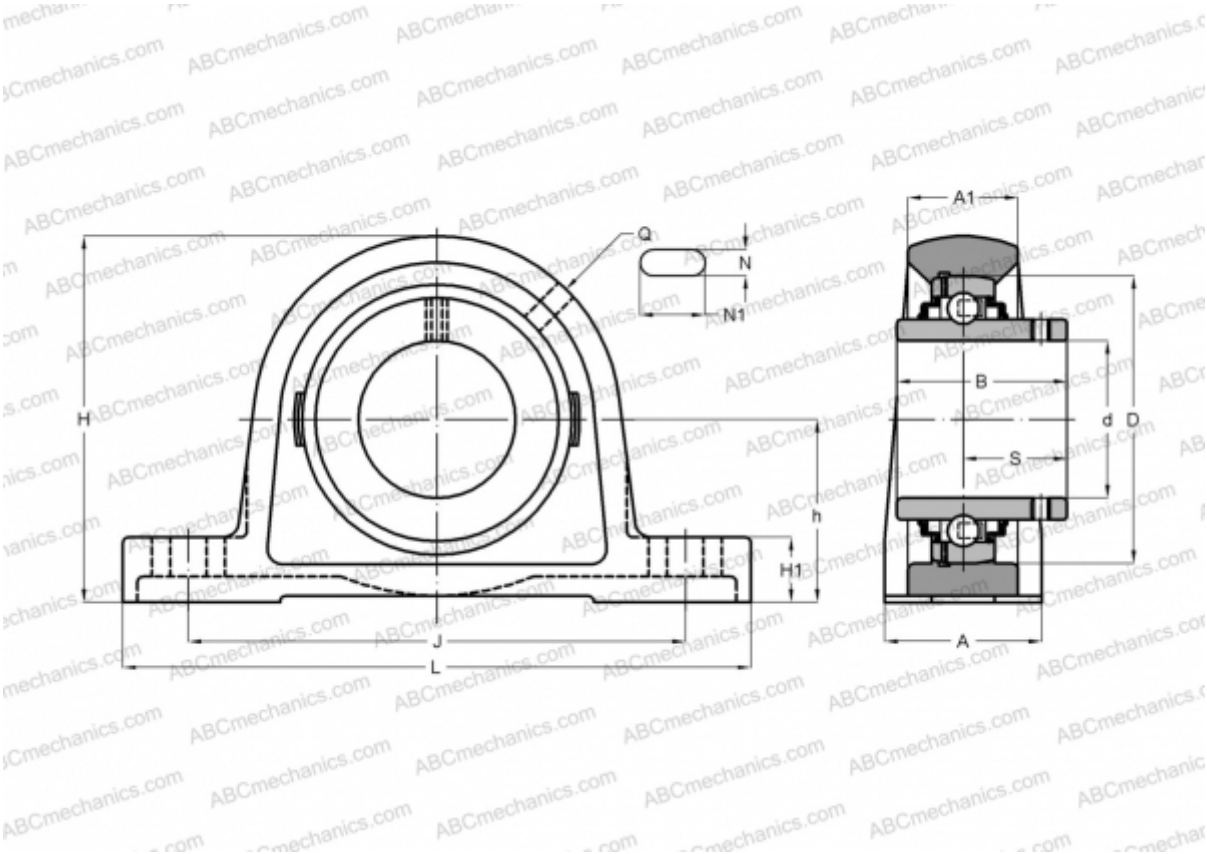

Technical specification

DIMENSIONS, MM	
d	35,000
D	72,000
B	42,900
L	160,000
H	93,000
A	45,000
J	126,000
H1	19,000
N	14,000
N1	21,000
h	47,600
WEIGHT, KG	1,450
Bearing	YAR 207-2F/VA228
Housing	SY 507 U/VA228
MANUFACTURER	SKF

CALCULATION DATA	
Basic dynamic load rating, C	25,500 kN
Basic static load rating, Co	15,300 kN
Limiting speed	160 r/min
Operating temperature max	350 °C