FY 1.1/4 TF/VA228 SKF

Ball bearing units

TYPE: Housing units, Four-bolt flanged housing units, Cast iron housing, Radial insert ball bearing with grub screws in inner ring, Type FY..TF/VA228, high temperature, for high demands, inch size (-150°/+350°) (SKF)

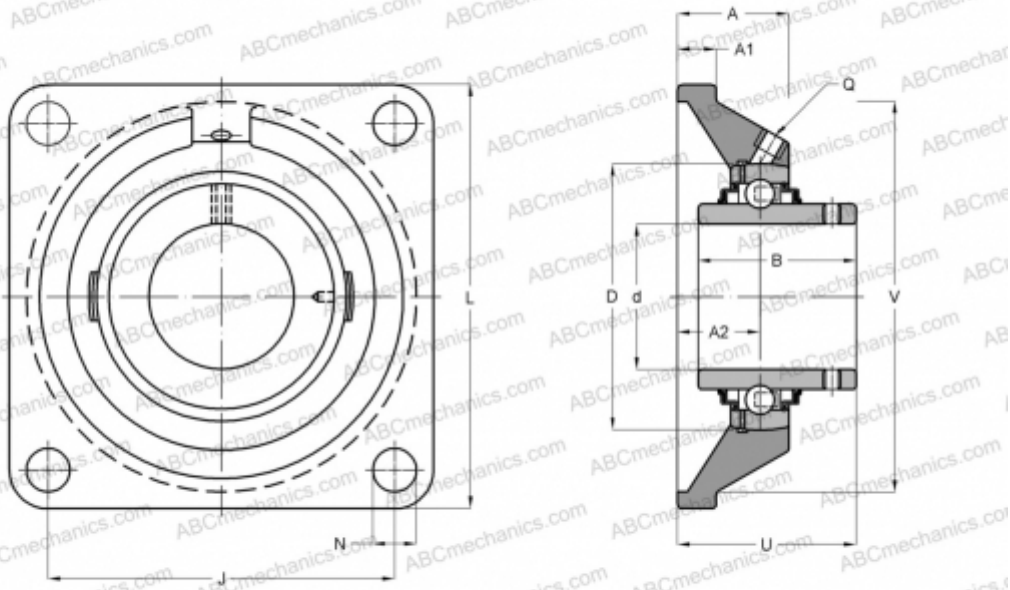

Technical specification

DIMENSIONS, MM	
d	31,750
D	72,000
B	42,900
L	118,000
A	34,500
J	92,000
A1	13,000
N	14,300
U	46,400

WEIGHT, KG	1,400
Bearing	YAR 207-104-
Housing	FY 507 U/VA228

MANUFACTURER	SKF

CALCULATION DATA	
Basic dynamic load rating, C	25,500 kN
Basic static load rating, Co	15,300 kN
Limiting speed	160 r/min
Operating temperature max	350 °C