FY 2. TF/VA228 SKF

Ball bearing units

TYPE: Housing units, Four-bolt flanged housing units, Cast iron housing, Radial insert ball bearing with grub screws in inner ring, Type FY..TF/VA228, high temperature, for high demands, inch size (-150°/+350°) (SKF)

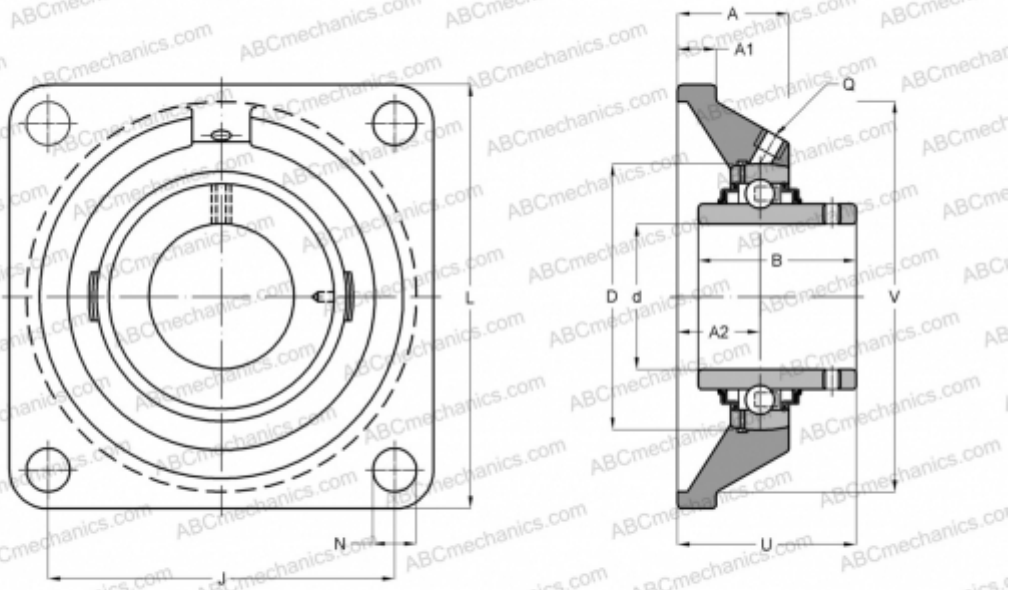

Technical specification

DIMENSIONS, MM	
d	50,800
D	100,000
B	55,600
L	162,000
A	47,500
J	130,000
A1	16,000
N	19,000
U	64,400
WEIGHT, KG	3,750
Bearing	YAR 211-200-
Housing	FY 511 U/VA228

MANUFACTURER	SKF
CALCULATION DATA	
Basic dynamic load rating, C	43,600 kN
Basic static load rating, Co	29,000 kN
Limiting speed	110 r/min
Operating temperature max	350 °C