BFL 206 ASAHI

Ball bearing units

TYPE: Housing units, Two-bolt flanged housing units, Cast iron housing, Radial insert ball bearing with grub screws in inner ring, Type BFL (ASAHI)

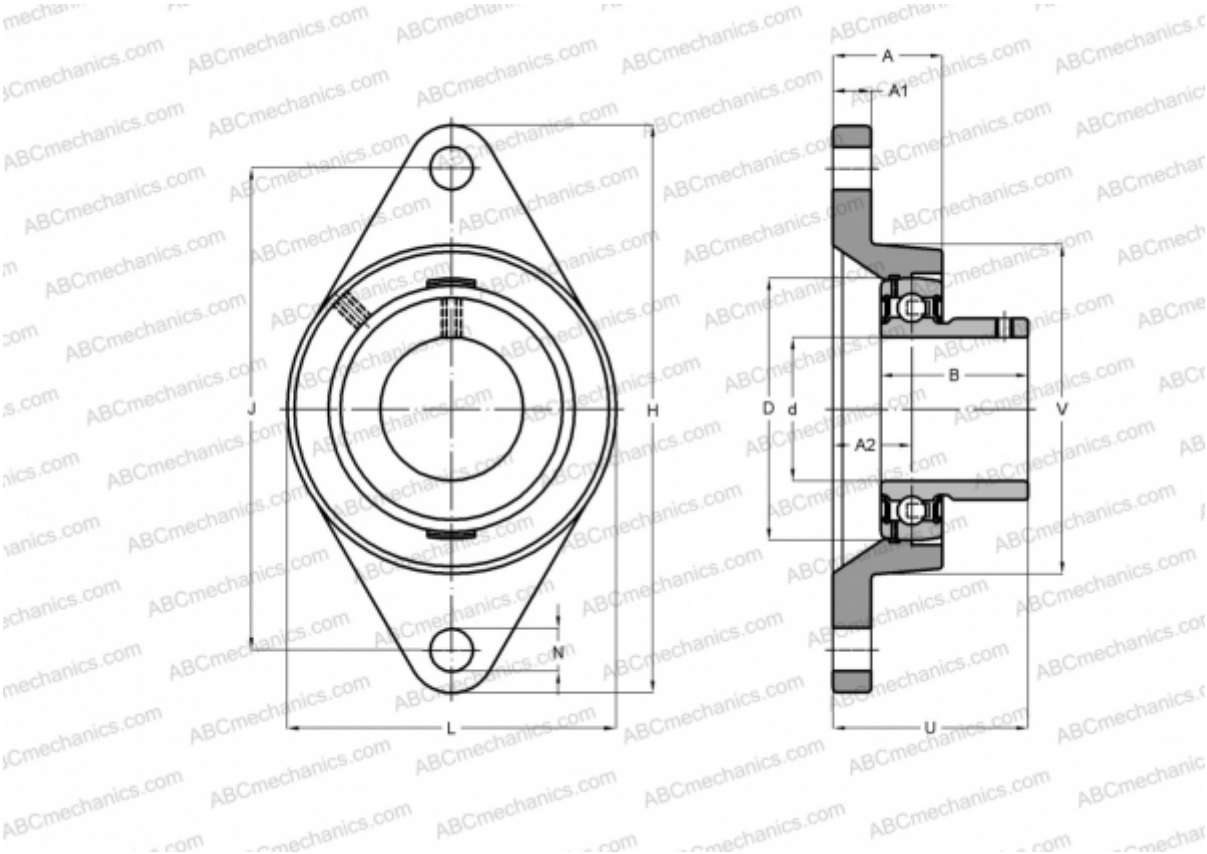

Technical specification

DIMENSIONS, MM	
d	30,000
D	62,000
B	30,300
L	80,000
H	148,000
A	31,000
J	117,000
A1	14,000
A2	18,000
N	16,000
U	40,300
WEIGHT, KG	0,880
Bearing	B 6
Housing	FL 206
MANUFACTURER	ASAHI