BLFL 1J ASAHI

Ball bearing units

TYPE: Housing units, Two-bolt flanged housing units, Cast iron housing, Radial insert ball bearing with grub screws in inner ring, Type BLFL (ASAHI)

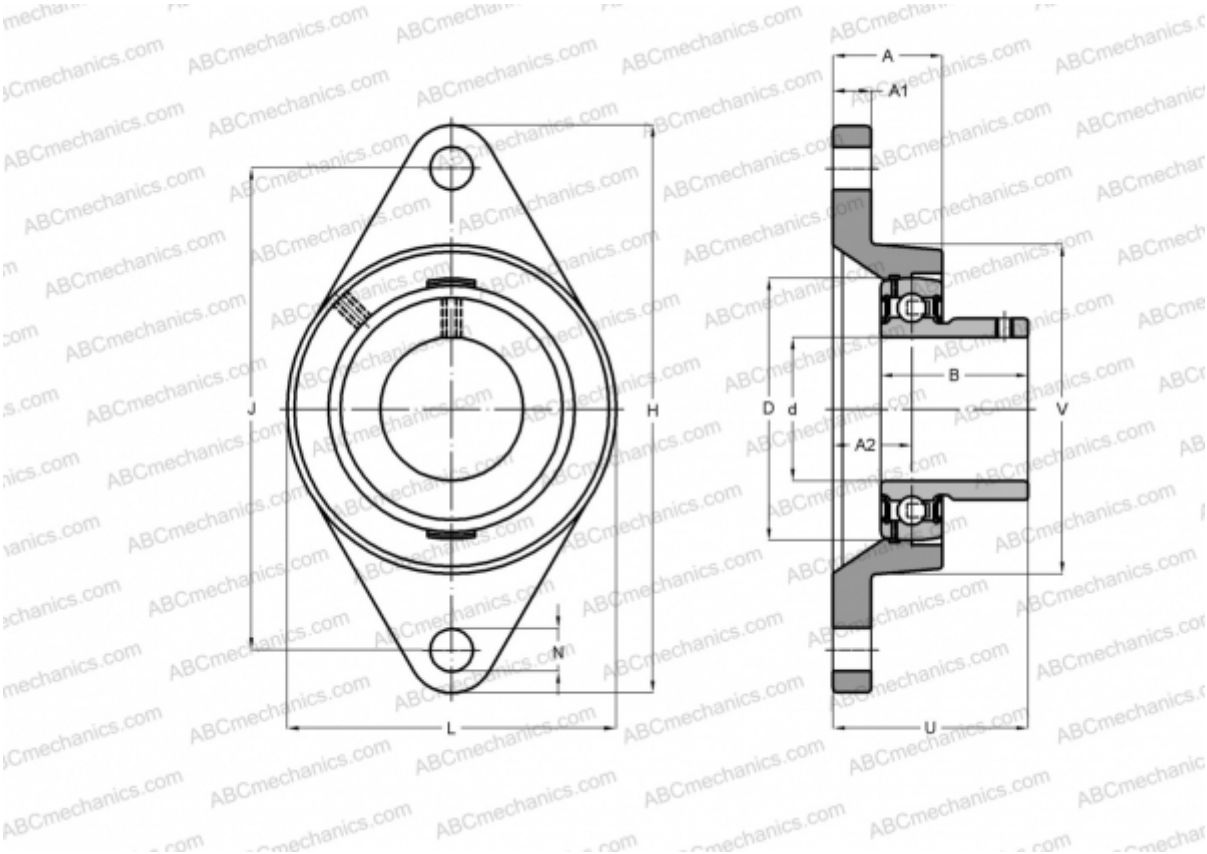

Technical specification

DIMENSIONS, MM	
d	12,000
D	40,000
B	22,000
L	56,000
H	81,000
A	18,000
J	63,500
A1	9,500
A2	9,500
N	7,000
U	25,500
WEIGHT, KG	0,280
Bearing	B 1
Housing	LFL 3J
MANUFACTURER	ASAHI