BPF 5 ASAHI

Ball bearing units

TYPE: Housing units, Three/four-bolt flanged housing units, Sheet steel housing, Radial insert ball bearing with grub screws in inner ring, Type BPF (ASAHI)

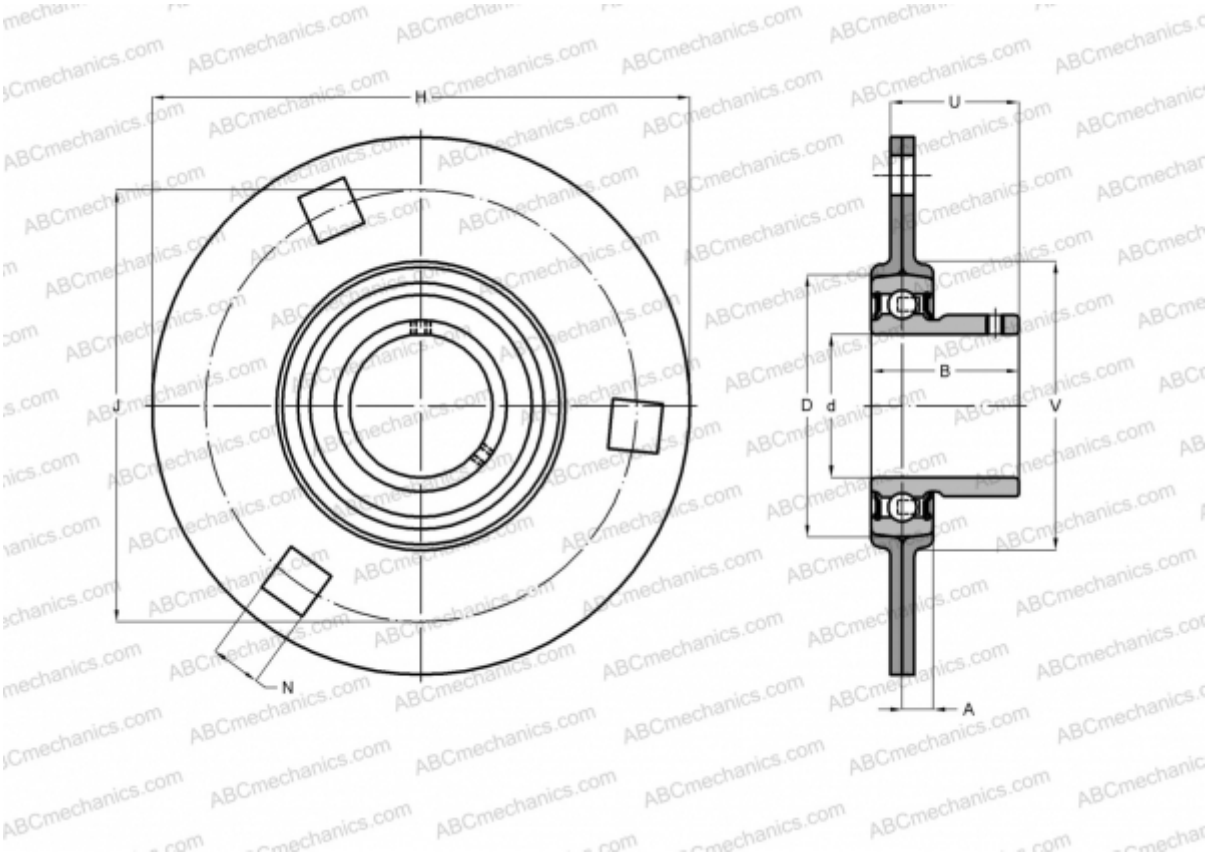

Technical specification

DIMENSIONS, MM	
d	25,000
D	52,000
B	27,000
H	95,000
A	9,000
J	76,000
N	9,000
V	60,000
WEIGHT, KG	0,350
Bearing	B 5
Housing	PF 5

MANUFACTURER	ASAHI