BPFT 1 ASAHI

Ball bearing units

TYPE: Housing units, Three/four-bolt flanged housing units, Sheet steel housing, Radial insert ball bearing with grub screws in inner ring, Type BPFT (ASAHI)

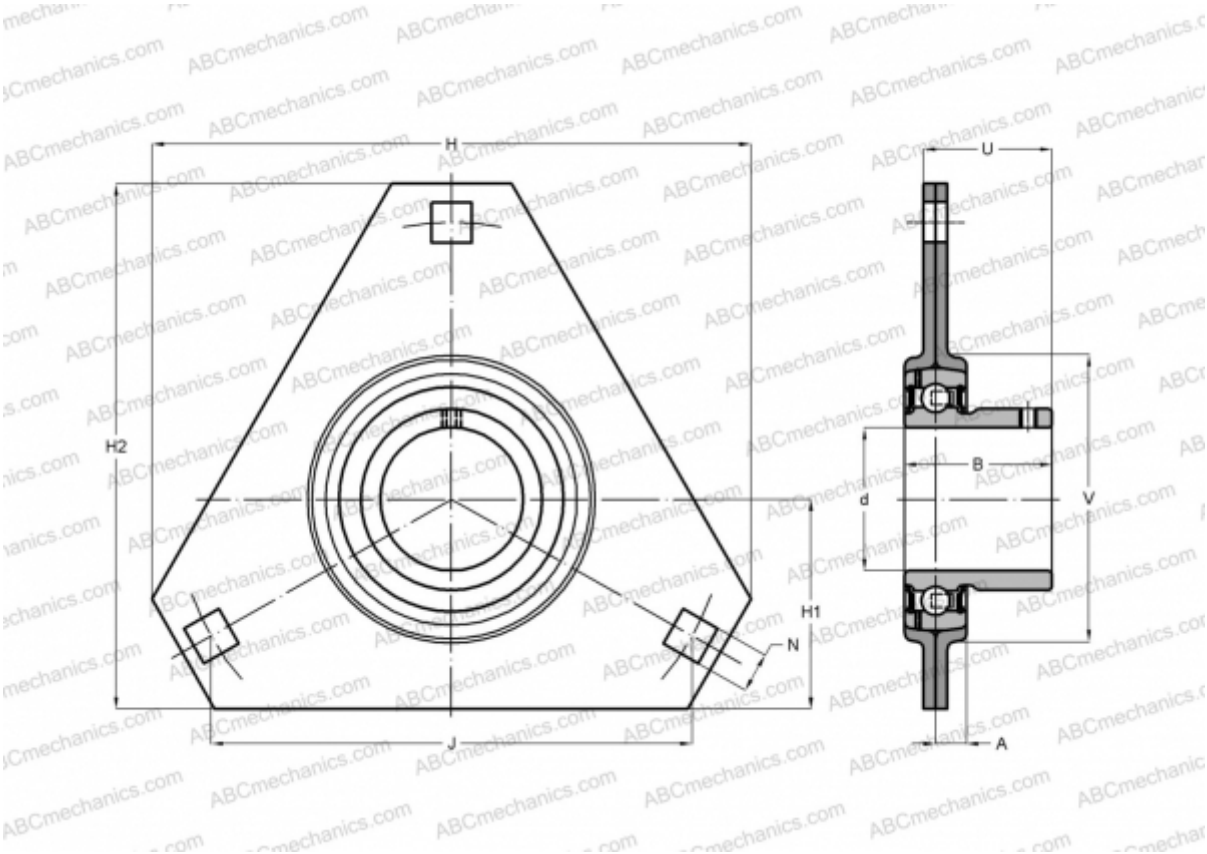

Technical specification

DIMENSIONS, MM	
d	12,000
D	40,000
B	22,000
H	81,000
A	7,000
J	63,500
H1	29,000
N	7,000
V	49,000
WEIGHT, KG	0,210
Bearing	B 1
Housing	PFT 3

MANUFACTURER	ASAHI