UDF 205 ASAHI

Ball bearing units

TYPE: Housing units, Four-bolt flanged housing units, Cast iron housing, Radial insert ball bearing with eccentric locking collar, Type UDF (ASAHI)

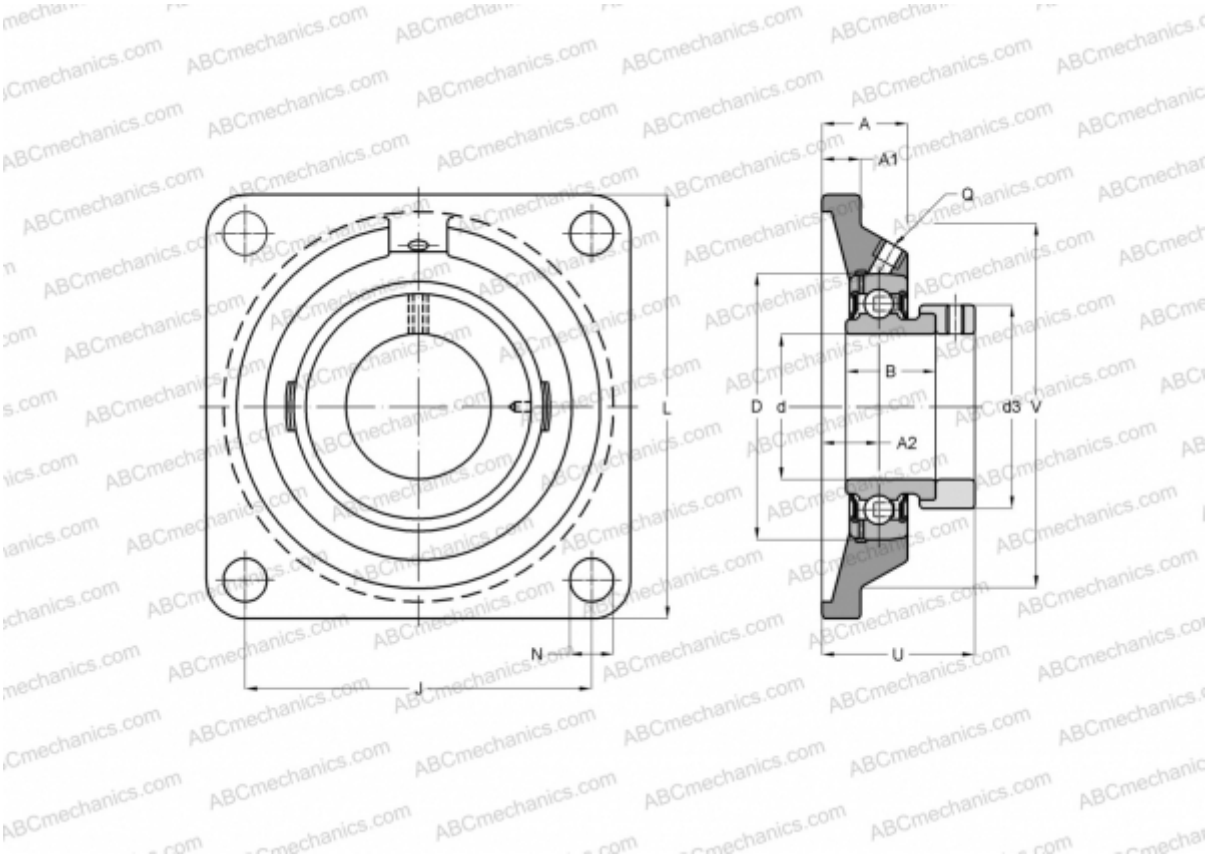

Technical specification

DIMENSIONS, MM	
d	25,000
D	52,000
B	23,000
L	95,000
A	27,000
J	70,000
A1	14,000
A2	16,000
N	12,000
d3	34,000
U	36,500
WEIGHT, KG	0,810
Bearing	UD205 + EE
Housing	F 205
MANUFACTURER	ASAHI