UCLF 209 ASAHI

Ball bearing units

TYPE: Housing units, Four-bolt flanged housing units, Cast iron housing, Radial insert ball bearing with grub screws in inner ring, Type UCLF (ASAHI)

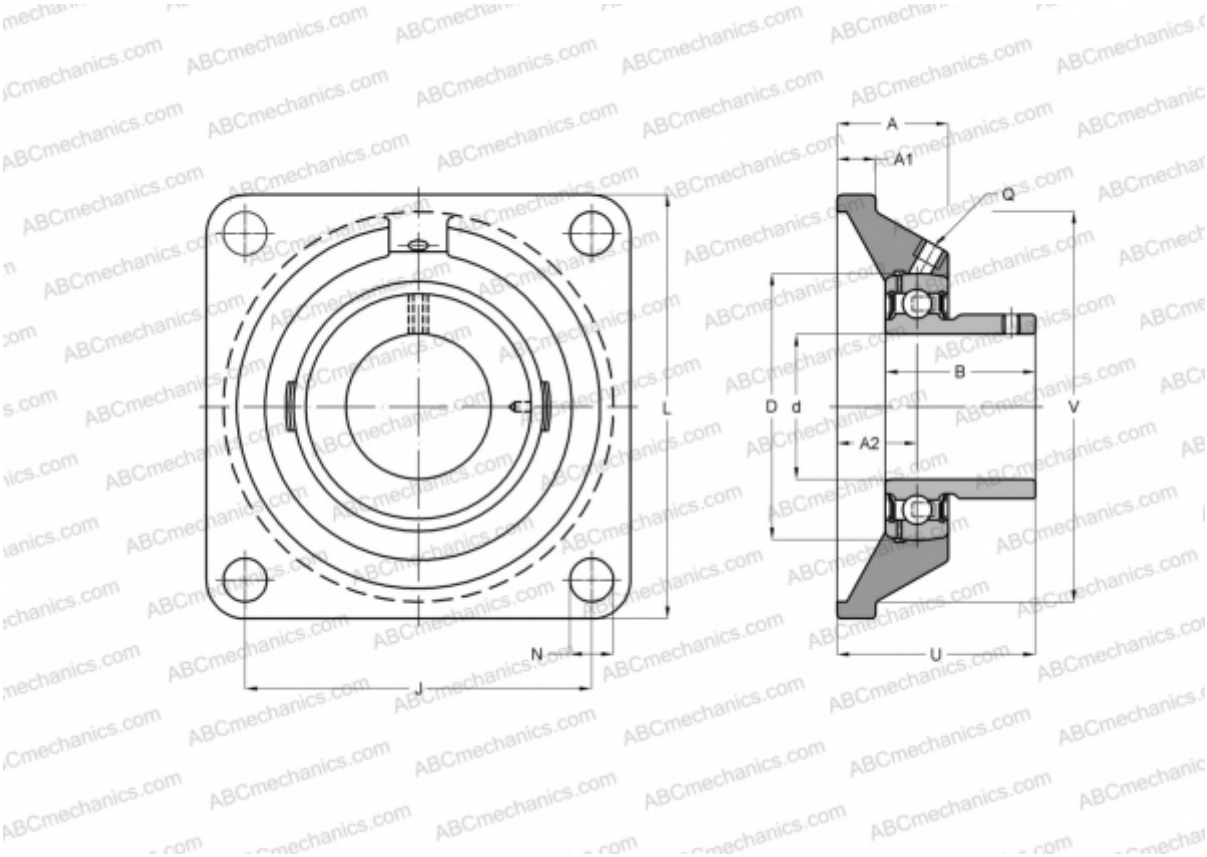

Technical specification

DIMENSIONS, MM	
d	45,000
D	85,000
B	49,200
L	137,000
A	42,000
J	104,800
A1	16,000
A2	24,600
N	16,000
U	54,800
WEIGHT, KG	2,400
Bearing	UC 209
Housing	LF 209

MANUFACTURER	ASAHI