UCFS 310 ASAHI

Ball bearing units

TYPE: Housing units, Four-bolt flanged housing units, Cast iron housing, Radial insert ball bearing with grub screws in inner ring, Type UCFS (ASAHI)

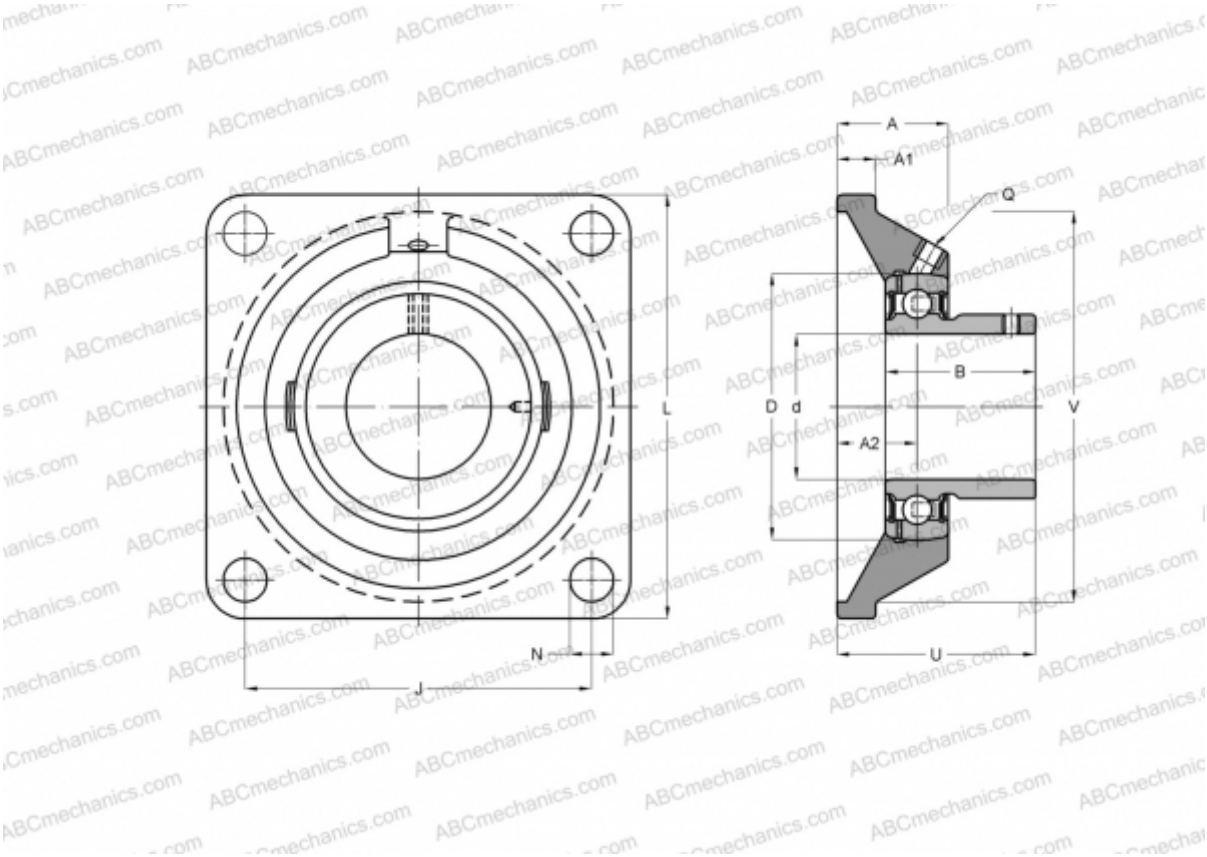

Technical specification

DIMENSIONS, MM	
d	50,000
D	110,000
B	61,000
L	175,000
A	36,000
J	132,000
A1	19,000
N	23,000
U	55,000
V	140,000
WEIGHT, KG	5,300
Bearing	UC 310
Housing	FS 310

MANUFACTURER	ASAHI