UDT 208 ASAHI

Ball bearing units

TYPE: Housing units, Take-up housing units, Cast iron housing, Radial insert ball bearing with eccentric locking collar, Type UDT (ASAHI)

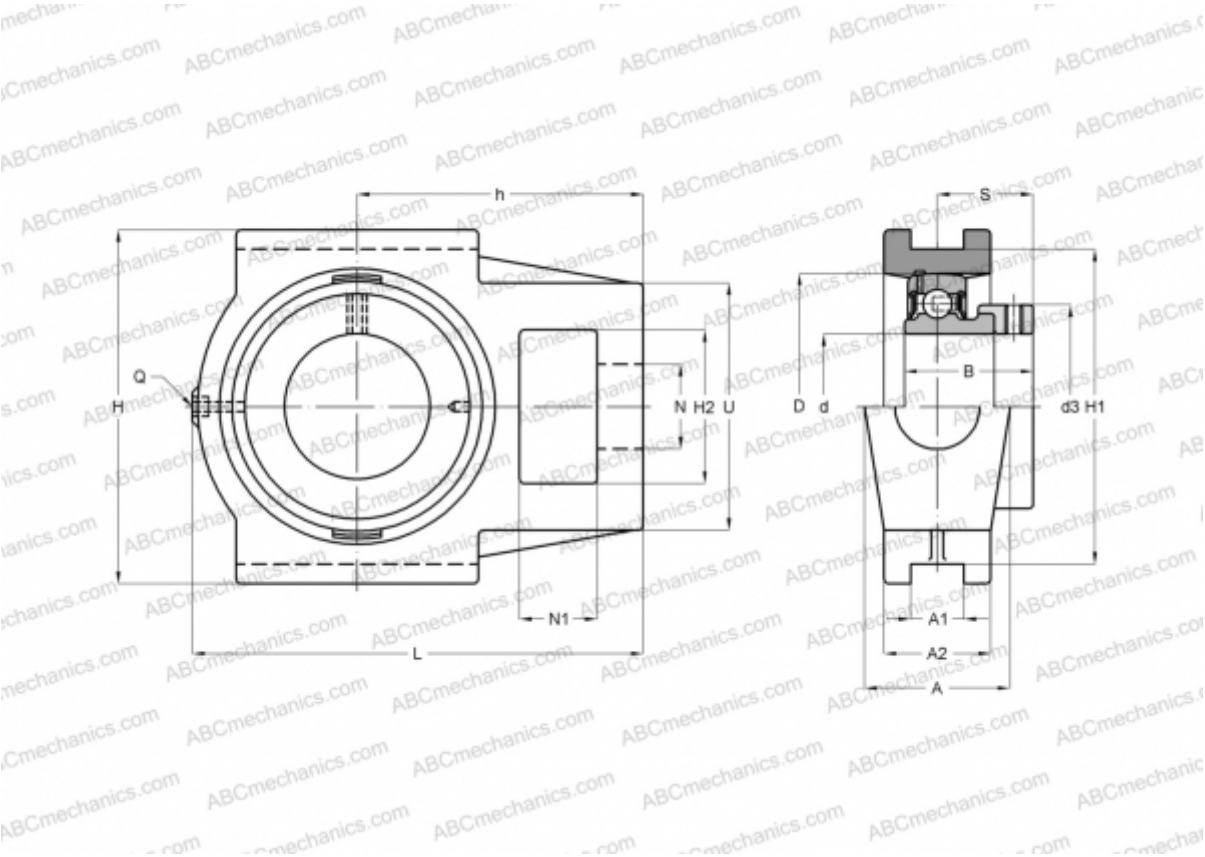

Technical specification

DIMENSIONS, MM	
d	40,000
D	80,000
B	40,000
L	144,000
H	114,000
A	49,000
H2	49,000
A1	16,000
A2	33,000
H1	102,000
N	29,000
N1	19,000
d3	53,000
U	83,000
h	88,000

WEIGHT, KG	2,300
Bearing	UD 208 + EE
Housing	T 208
MANUFACTURER	ASAHI