UCT 206 ASAHI

Ball bearing units

TYPE: Housing units, Take-up housing units, Cast iron housing, Radial insert ball bearing with grub screws in inner ring, Type UCT (ASAHI)

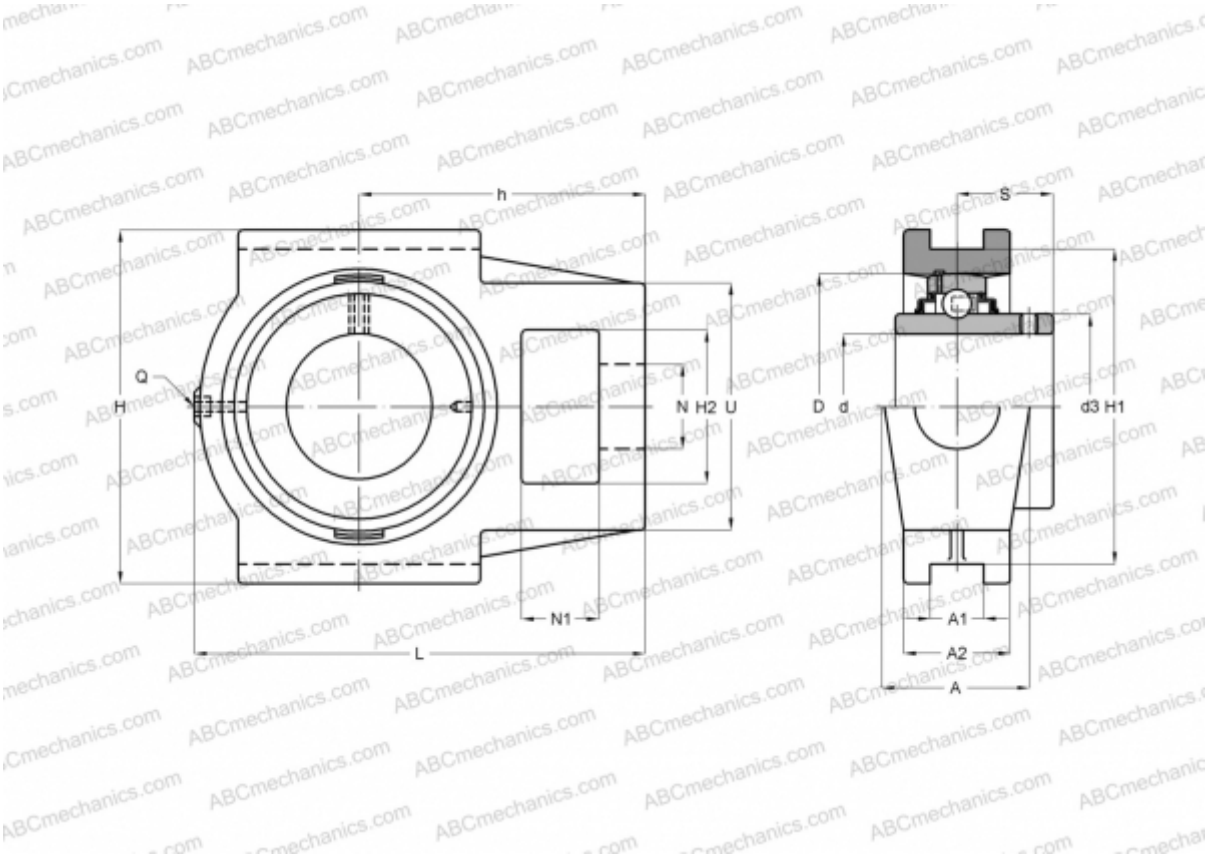

Technical specification

DIMENSIONS, MM	
d	30,000
D	62,000
B	38,100
L	113,000
H	102,000
A	37,000
H2	37,000
A1	12,000
A2	28,000
H1	89,000
N	22,000
N1	16,000
S	22,200
d3	40,500
U	56,000

DIMENSIONS, MM	
h	70,000
WEIGHT, KG	1,300
Bearing	UC 206
Housing	T 206
MANUFACTURER	ASAHI