UCT X08 ASAHI

Ball bearing units

TYPE: Housing units, Take-up housing units, Cast iron housing, Radial insert ball bearing with grub screws in inner ring, Type UCTX (ASAHI)

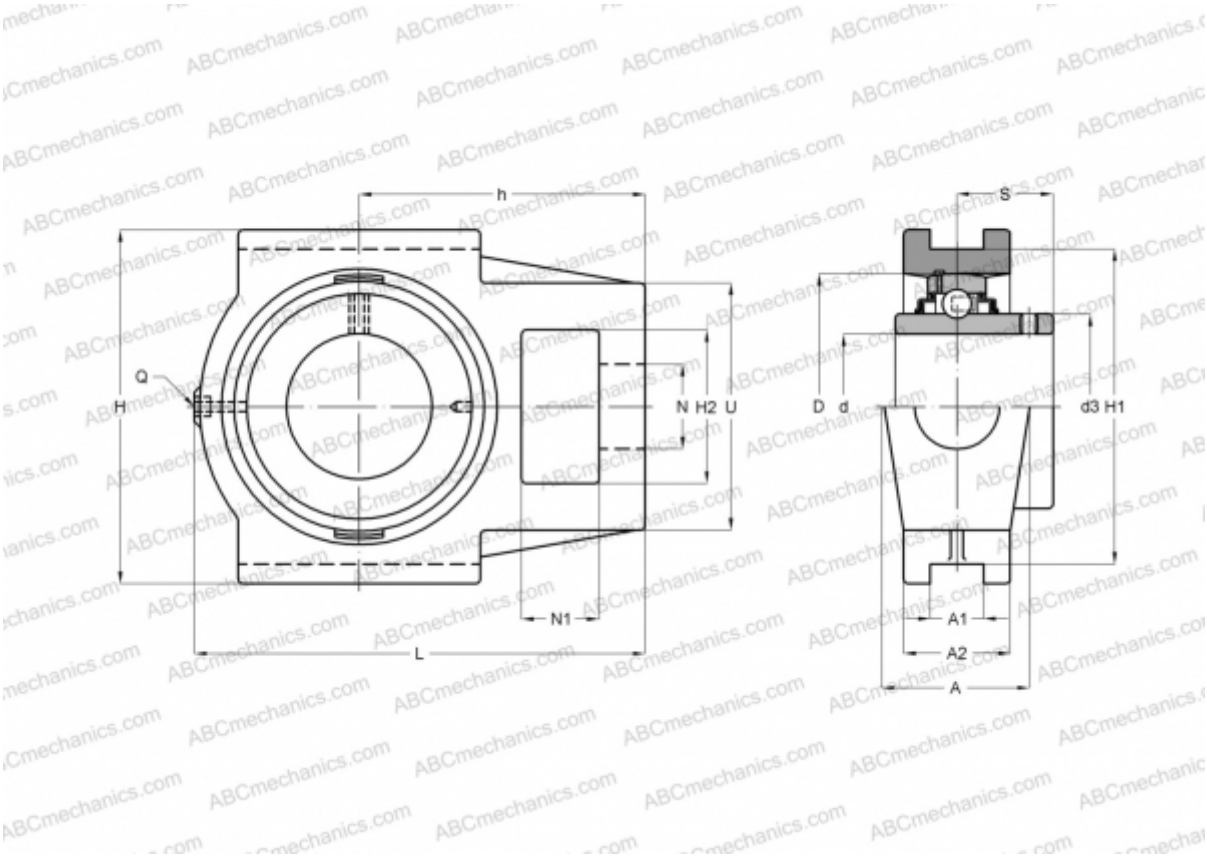

Technical specification

DIMENSIONS, MM	
d	40,000
D	85,000
B	49,200
L	144,000
H	117,000
A	49,000
H2	49,000
A1	16,000
A2	36,000
H1	102,000
N	29,000
N1	19,000
S	30,200
d3	57,300
U	83,000

DIMENSIONS, MM	
l	83,000
h	87,000
WEIGHT, KG	2,600
Bearing	UC X08
Housing	T X08
MANUFACTURER	ASAHI