UCP 204E ASAHI

Ball bearing units

TYPE: Housing units, Plummer block, Cast iron housing, Radial insert ball bearing with grub screws in inner ring, Type UCP..E with pressed steel covers, closed cover (ASAHI)

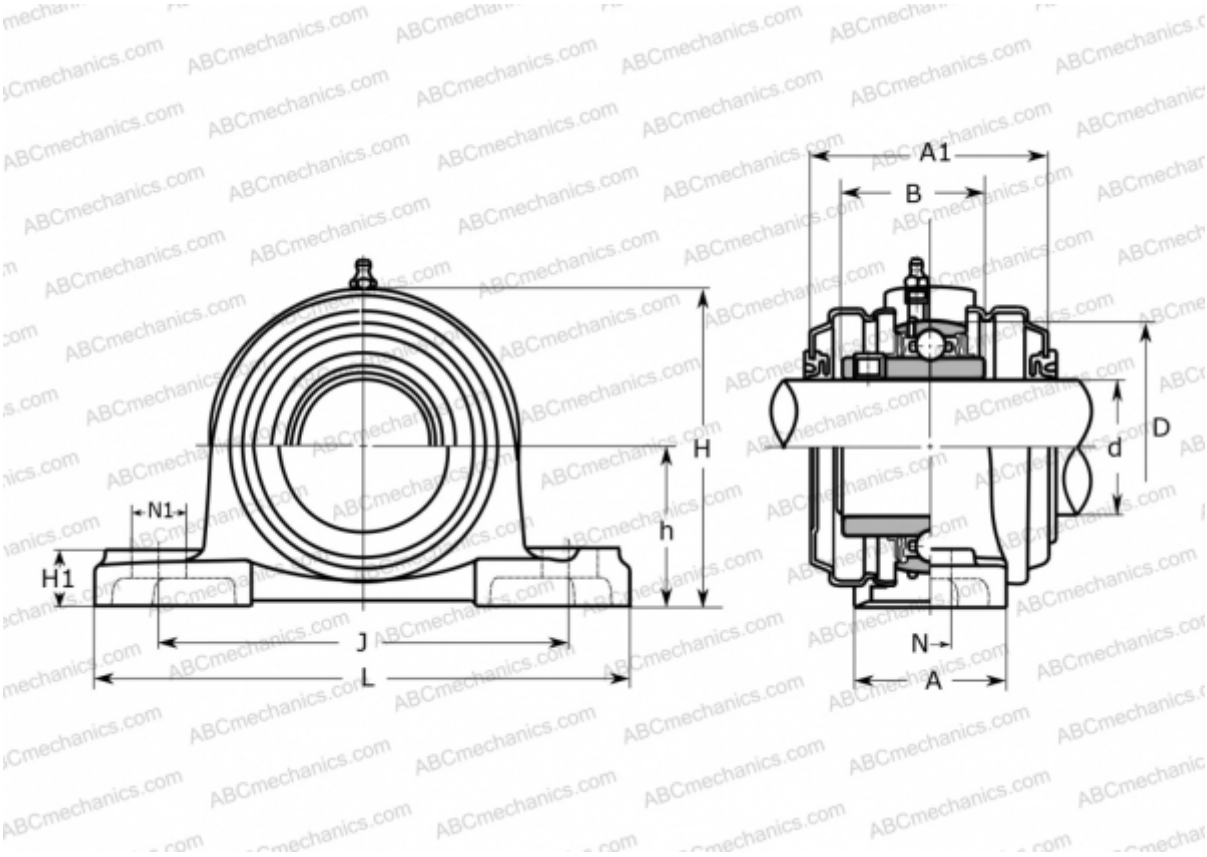

Technical specification

DIMENSIONS, MM	
d	20,000
D	47,000
B	31,000
L	127,000
H	65,000
A	38,000
J	95,000
A1	56,000
H1	15,000
N	13,000
N1	19,000
h	33,300
WEIGHT, KG	0,710

Bearing	UC 204
Housing	P 204C
MANUFACTURER	ASAHI