UCP 206E ASAHI

Ball bearing units

TYPE: Housing units, Plummer block, Cast iron housing, Radial insert ball bearing with grub screws in inner ring, Type UCP..E with pressed steel covers, closed cover (ASAHI)

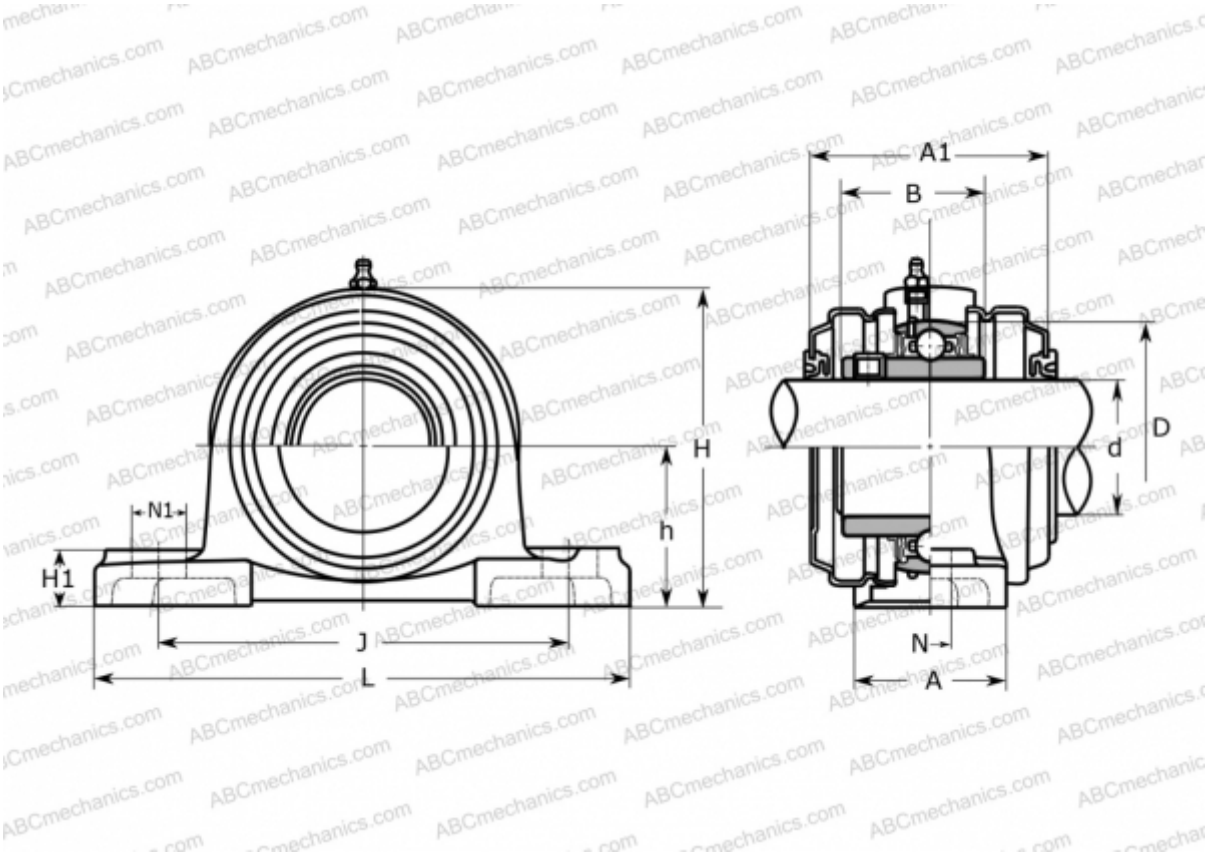

Technical specification

DIMENSIONS, MM	
d	30,000
D	62,000
B	38,100
L	165,000
H	83,000
A	48,000
J	121,000
A1	65,000
H1	18,000
N	17,000
N1	21,000
h	42,900
WEIGHT, KG	1,400

Bearing	UC 206
Housing	P 206C
MANUFACTURER	ASAHI