UCPA 203 ASAHI

Ball bearing units

TYPE: Housing units, Plummer block, Narrow cast iron housing, Radial insert ball bearing with grub screws in inner ring, Type UCPA (ASAHI)

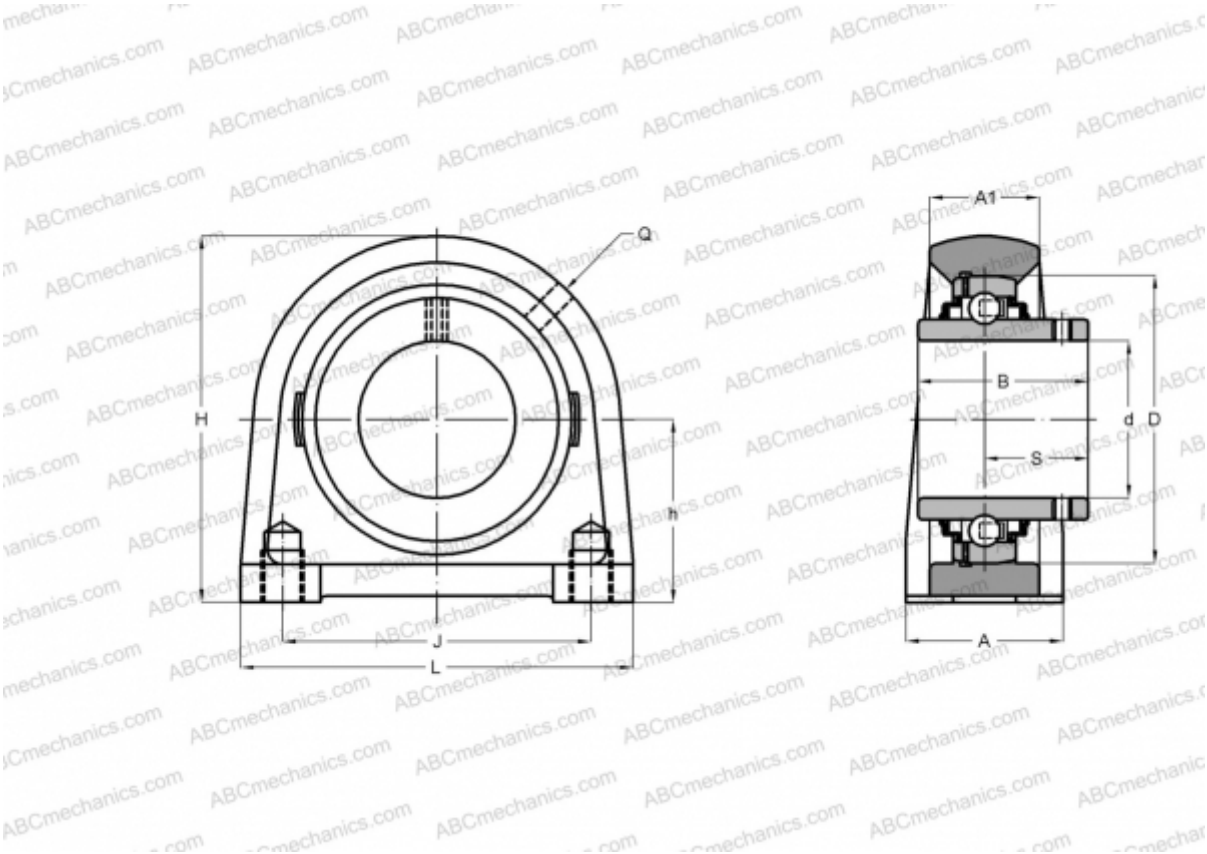

Technical specification

DIMENSIONS, MM	
d	17,000
D	47,000
B	31,000
L	76,000
H	62,000
A	38,000
J	52,000
S	18,300
h	30,200
WEIGHT, KG	0,670
Bearing	UC 203
Housing	PA 204

MANUFACTURER	ASAHI