UCEP 208 ASAHI

Ball bearing units

TYPE: Housing units, Plummer block, Cast iron housing, Radial insert ball bearing with grub screws in inner ring, Type UCEP (ASAHI)

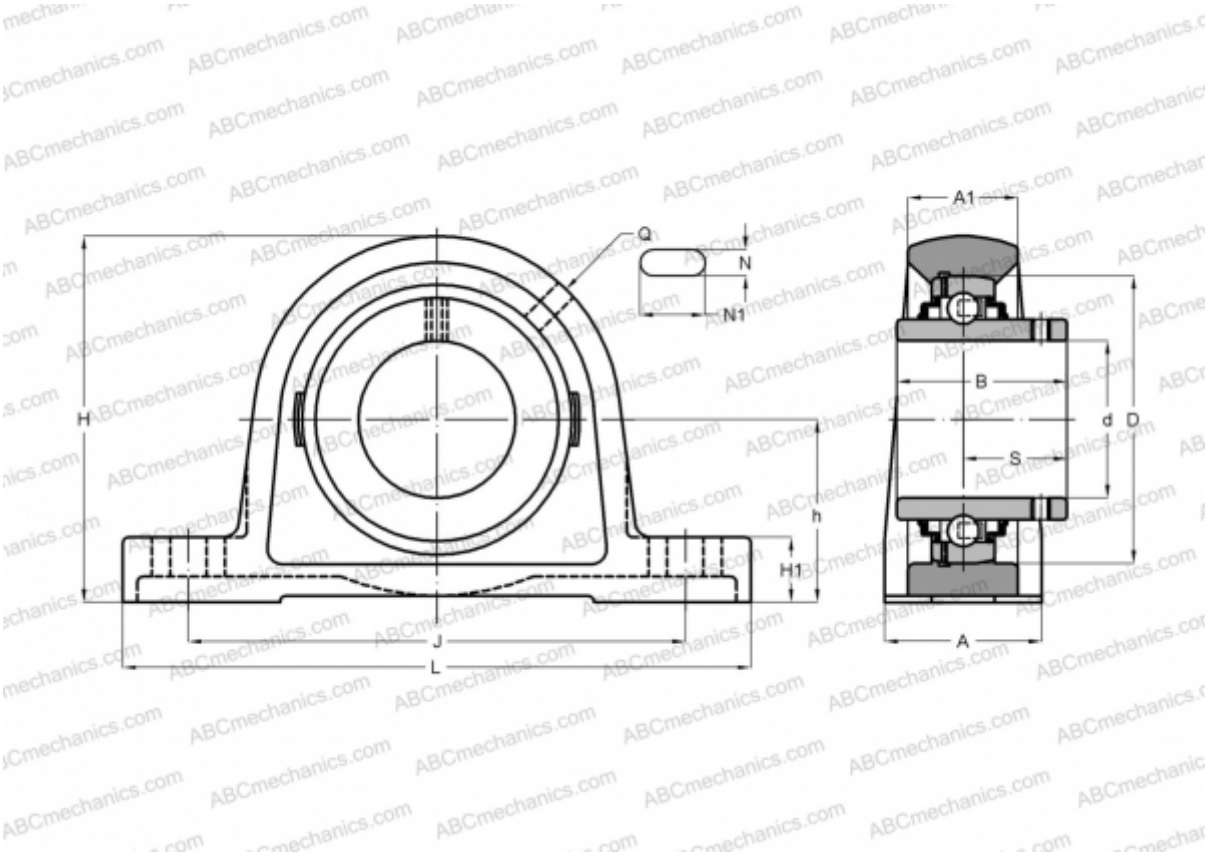

Technical specification

DIMENSIONS, MM	
d	40,000
D	80,000
B	49,200
L	222,000
H	116,000
A	67,000
J	156,000
H1	26,000
N	20,000
N1	24,000
S	30,200
h	58,700
WEIGHT, KG	3,500

Bearing	UC 208
Housing	EP 209
MANUFACTURER	ASAHI