RSAO50 INA

Ball bearing units

TYPE: Housing units, Plummer block, Cast iron housing, Radial insert ball bearing with eccentric locking collar, Type RSAO (INA)

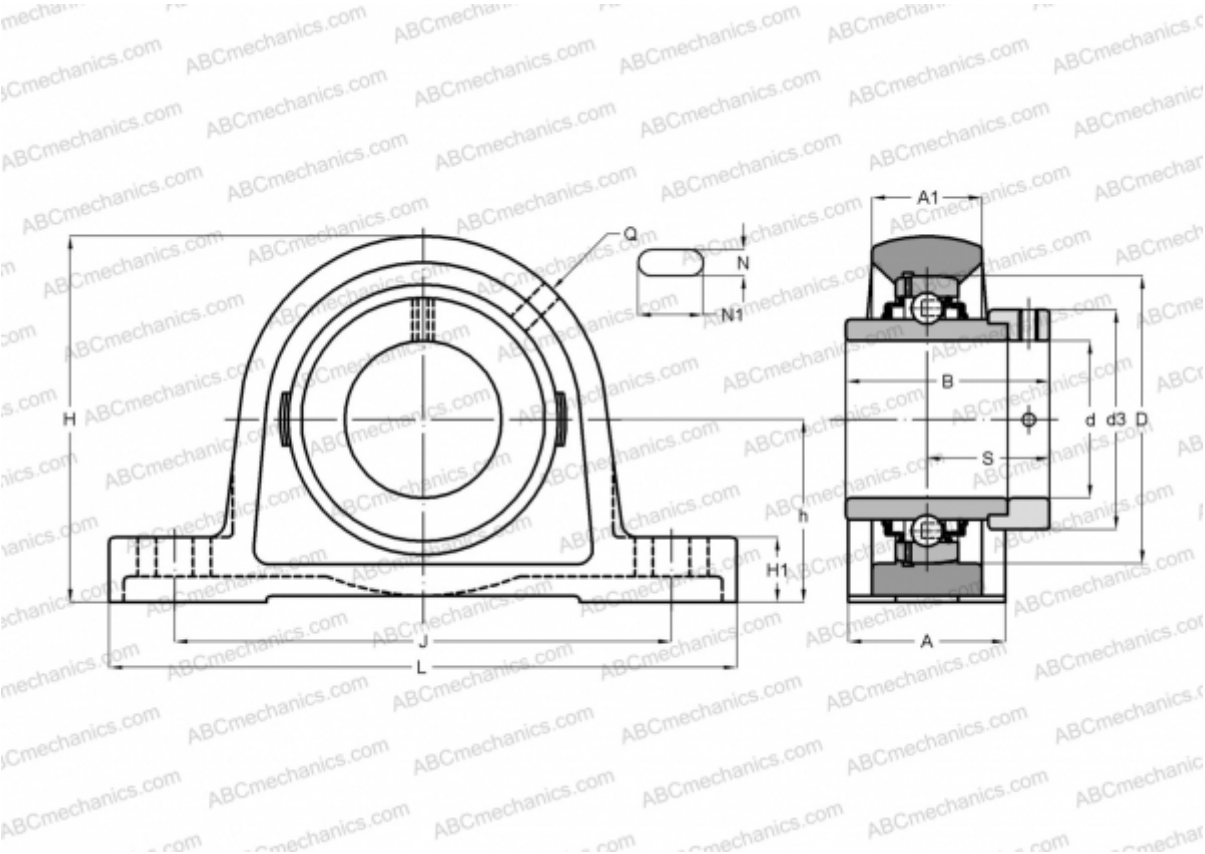

Technical specification

DIMENSIONS, MM	
d	50,000
D	110,000
B	66,800
L	275,000
H	143,000
A	75,000
J	212,000
A1	39,000
H1	27,000
N	20,000
N1	35,000
S	42,100
d3	75,800
h	75,000
Q	Rp1/8

WEIGHT, KG	6,100
Bearing	GNE50-KRR-B
Housing	GG.SAO10

MANUFACTURER	INA

CALCULATION DATA	
Basic dynamic load rating, C	62,000 kN
Basic static load rating, Co	38,000 kN