RASEY40-N INA

Ball bearing units

TYPE: Housing units, Plummer block, Cast iron housing, Radial insert ball bearing with grub screws in inner ring, Type RASEY (INA)

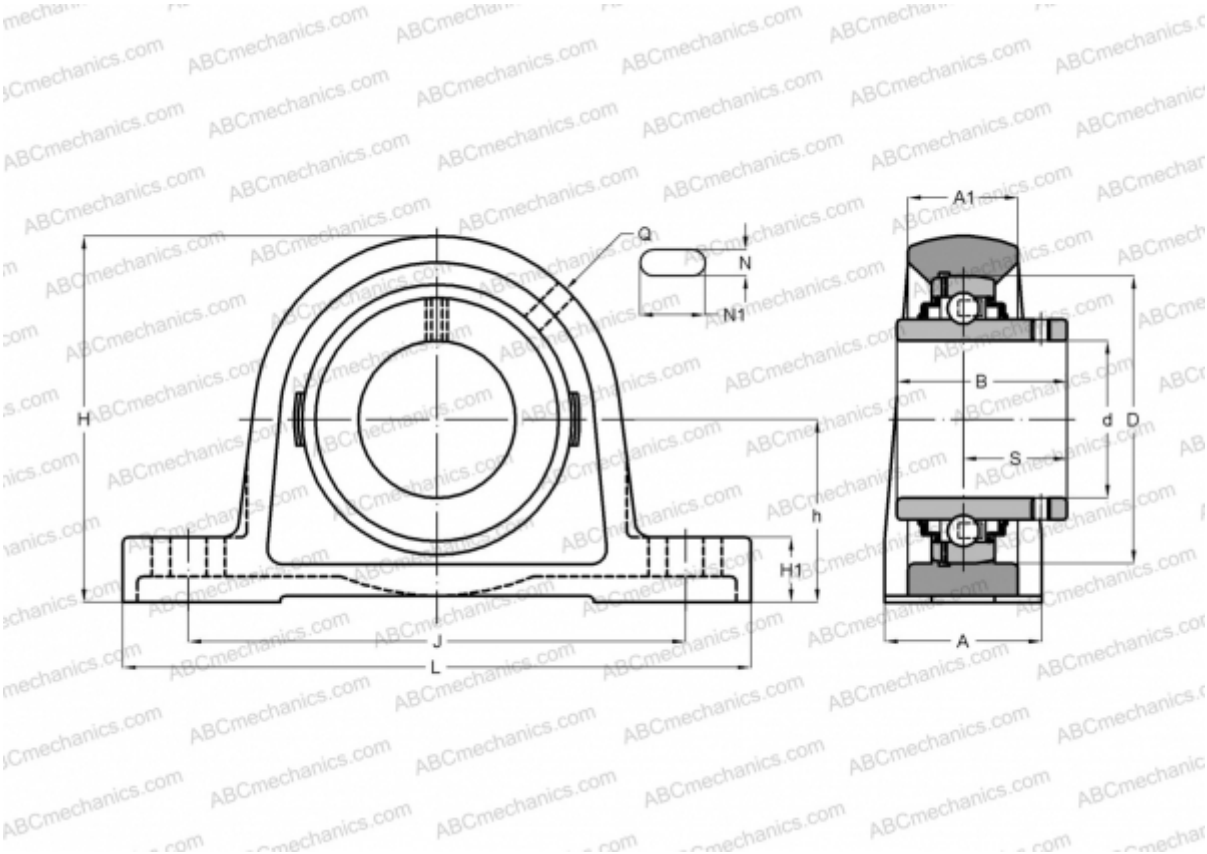

Technical specification

DIMENSIONS, MM	
d	40,000
D	80,000
B	49,200
L	179,000
H	99,000
A	48,000
J	138,000
A1	30,000
H1	19,000
N	14,000
N1	26,000
S	30,200
h	49,200
Q	Rp1/8

WEIGHT, KG	1,840
Bearing	GYE40-KRR-B
Housing	GG.ASE/AK08-
Protective cover	KASK08

MANUFACTURER	INA

CALCULATION DATA	
Basic dynamic load rating, C	32,500 kN
Basic static load rating, Co	19,800 kN