PSHE17 INA

Ball bearing units

TYPE: Housing units, Plummer block, Narrow cast iron housing, Radial insert ball bearing with eccentric locking collar, Type PSHE (INA)

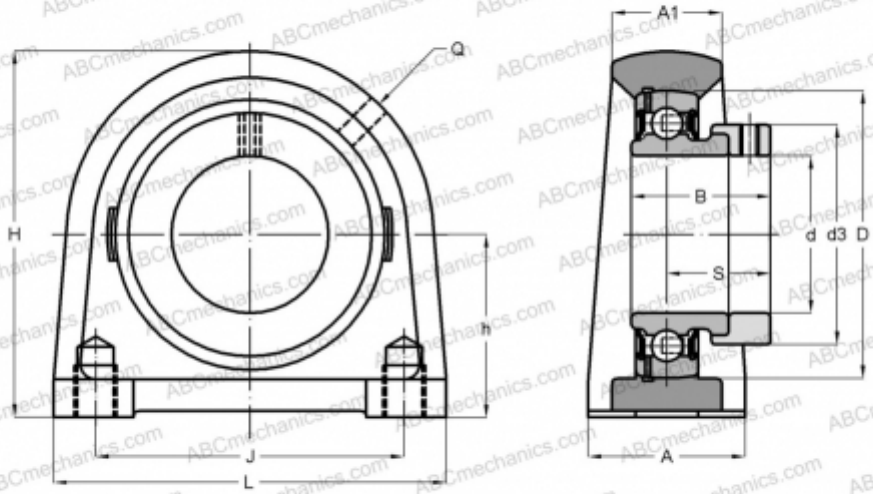

Technical specification

DIMENSIONS, MM	
d	17,000
D	40,000
B	28,600
L	63,000
H	57,000
A	30,000
J	47,000
A1	18,000
S	22,100
d3	28,000
h	30,200
Q	M6
WEIGHT, KG	0,440

Bearing	GRAE17-NPP-B
Housing	GG.SHE03
MANUFACTURER	INA
CALCULATION DATA	
Basic dynamic load rating, C	9,800 kN
Basic static load rating, Co	4,750 kN