RSHEY20-N INA

Ball bearing units

TYPE: Housing units, Plummer block, Narrow cast iron housing, Radial insert ball bearing with grub screws in inner ring, Type RSHEY (INA)

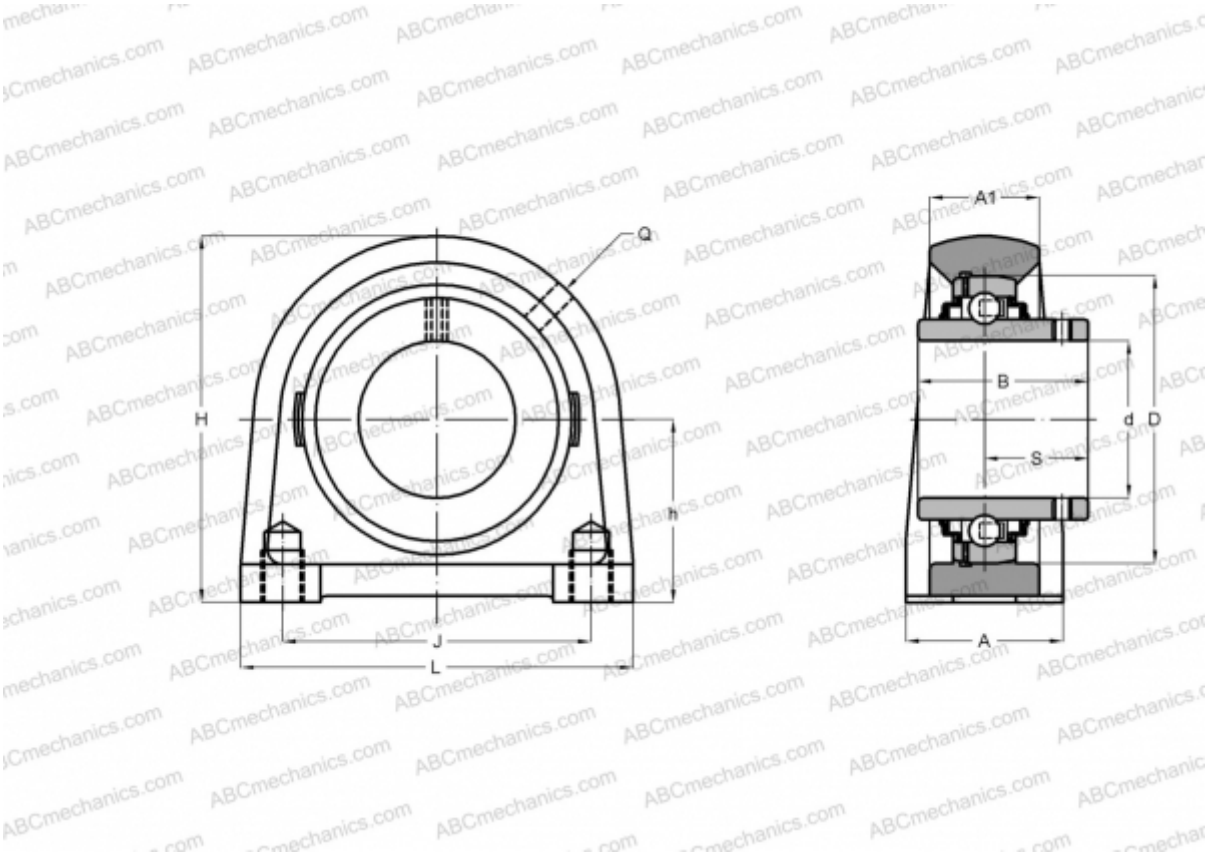

Technical specification

DIMENSIONS, MM	
d	20,000
D	47,000
B	31,000
L	65,000
H	64,000
A	32,000
J	50,800
A1	19,000
S	18,300
h	33,300
Q	Rp1/8
WEIGHT, KG	0,430
Bearing	GYE20-KRR-B
Housing	GG.SHE04-N
Protective cover	KASK04
MANUFACTURER	INA

CALCULATION DATA	
Basic dynamic load rating, C	12,800 kN
Basic static load rating, Co	6,600 kN