RSHEY40-N INA

Ball bearing units

TYPE: Housing units, Plummer block, Narrow cast iron housing, Radial insert ball bearing with grub screws in inner ring, Type RSHEY (INA)

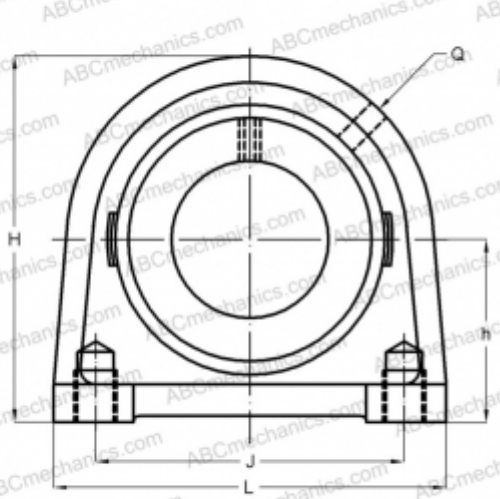

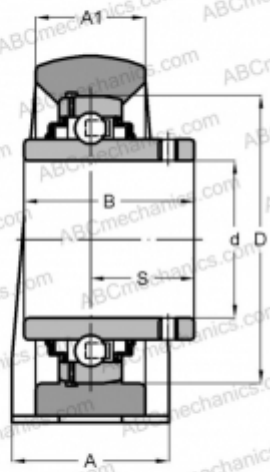

Technical specification

DIMENSIONS, MM	
d	40,000
D	80,000
B	49,200
L	116,000
H	99,000
A	48,000
J	88,900
A1	30,000
S	30,200
h	49,200
Q	Rp1/8
WEIGHT, KG	1,530
Bearing	GYE40-KRR-B
Housing	GG.SHE08-E-N
Protective cover	KASK08
MANUFACTURER	INA

CALCULATION DATA	
Basic dynamic load rating, C	32,500 kN
Basic static load rating, Co	19,800 kN