PBS25 INA

Ball bearing units

TYPE: Housing units, Plummer block, Sheet steel housing, Radial insert ball bearing with eccentric locking collar, Type PBS (INA)

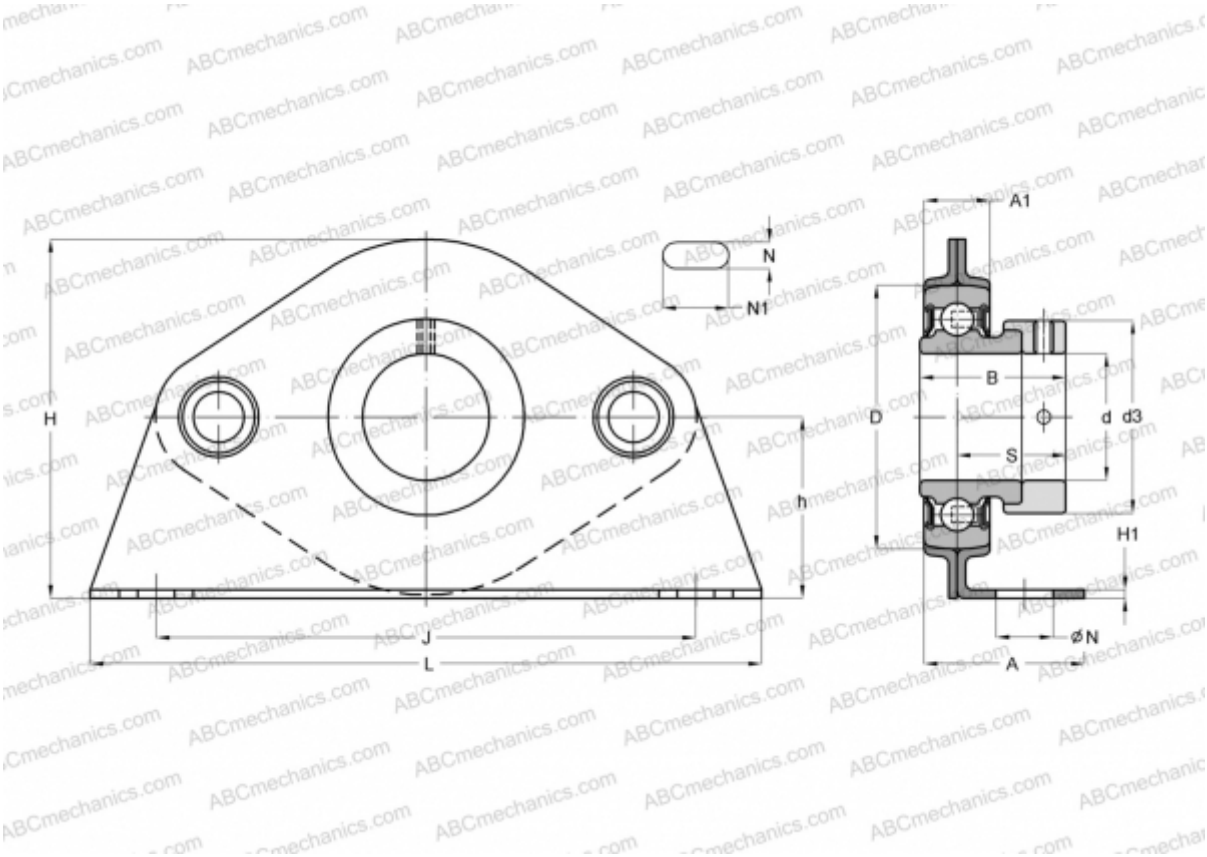

Technical specification

DIMENSIONS, MM	
d	25,000
D	52,000
B	31,000
L	133,500
H	72,000
A	34,100
J	95,500
A1	17,400
H1	3,400
N	10,500
N1	9,500
S	23,500
d3	37,500
h	36,500

WEIGHT, KG	0,490
Bearing	RAE25-NPP-B
Housing	GEH52-BT
MANUFACTURER	INA
CALCULATION DATA	
Basic dynamic load rating, C	14,000 kN
Basic static load rating, Co	7,800 kN