PBY17 INA

TYPE: Housing units, Plummer block, Sheet steel housing, Radial insert ball bearing with grub screws in inner ring, Type PBY (INA)

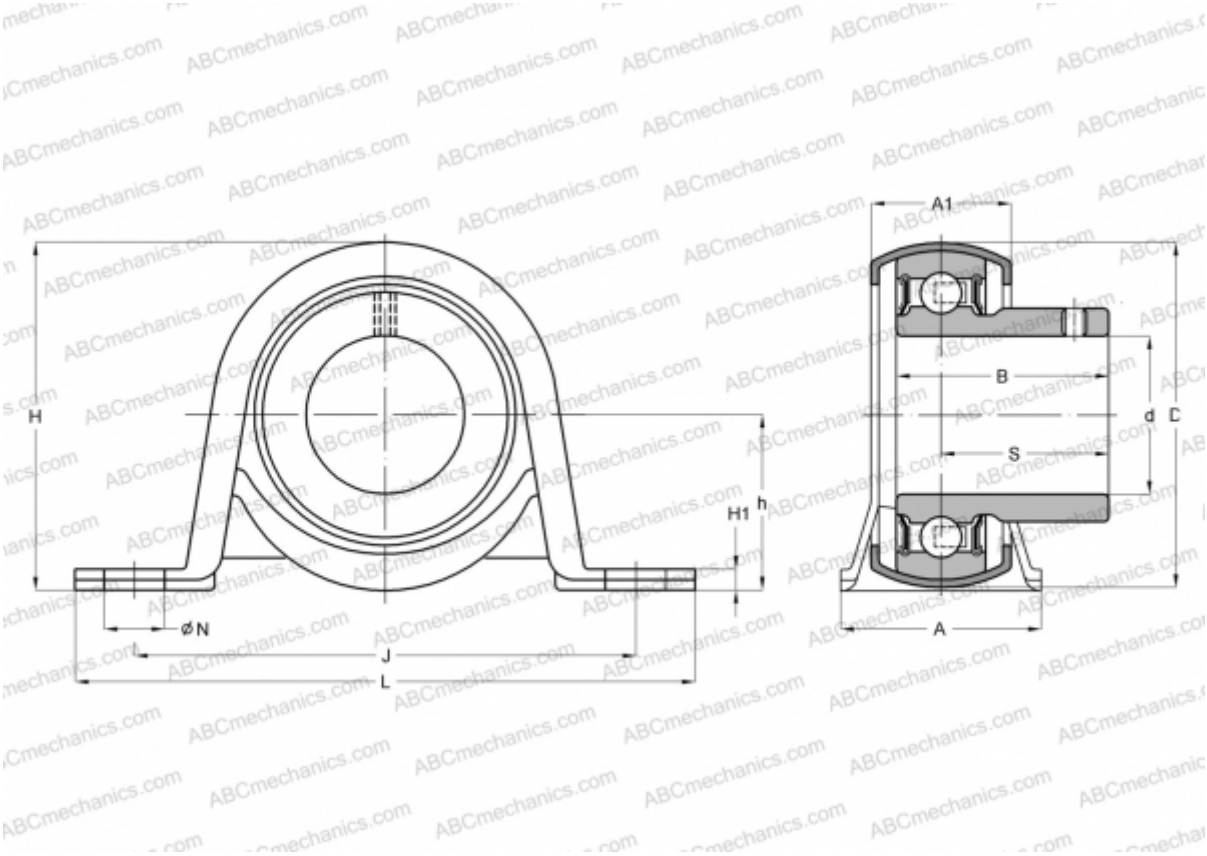

Technical specification

DIMENSIONS, MM	
d	17,000
D	40,000
B	22,000
L	85,700
H	43,200
A	25,400
J	68,000
A1	18,400
H1	2,600
N	9,500
S	16,000
h	22,200
WEIGHT, KG	0,150

Bearing	AY17-NPP-B
Housing	GEH40-BT
MANUFACTURER	INA
CALCULATION DATA	
Basic dynamic load rating, C	9,800 kN
Basic static load rating, Co	4,750 kN