PCJT20-N-FA125 INA

Ball bearing units

TYPE: Housing units, Two-bolt flanged housing units, Cast iron housing, Radial insert ball bearing with eccentric locking collar, Type PCJT (INA), coated with CORROTECT

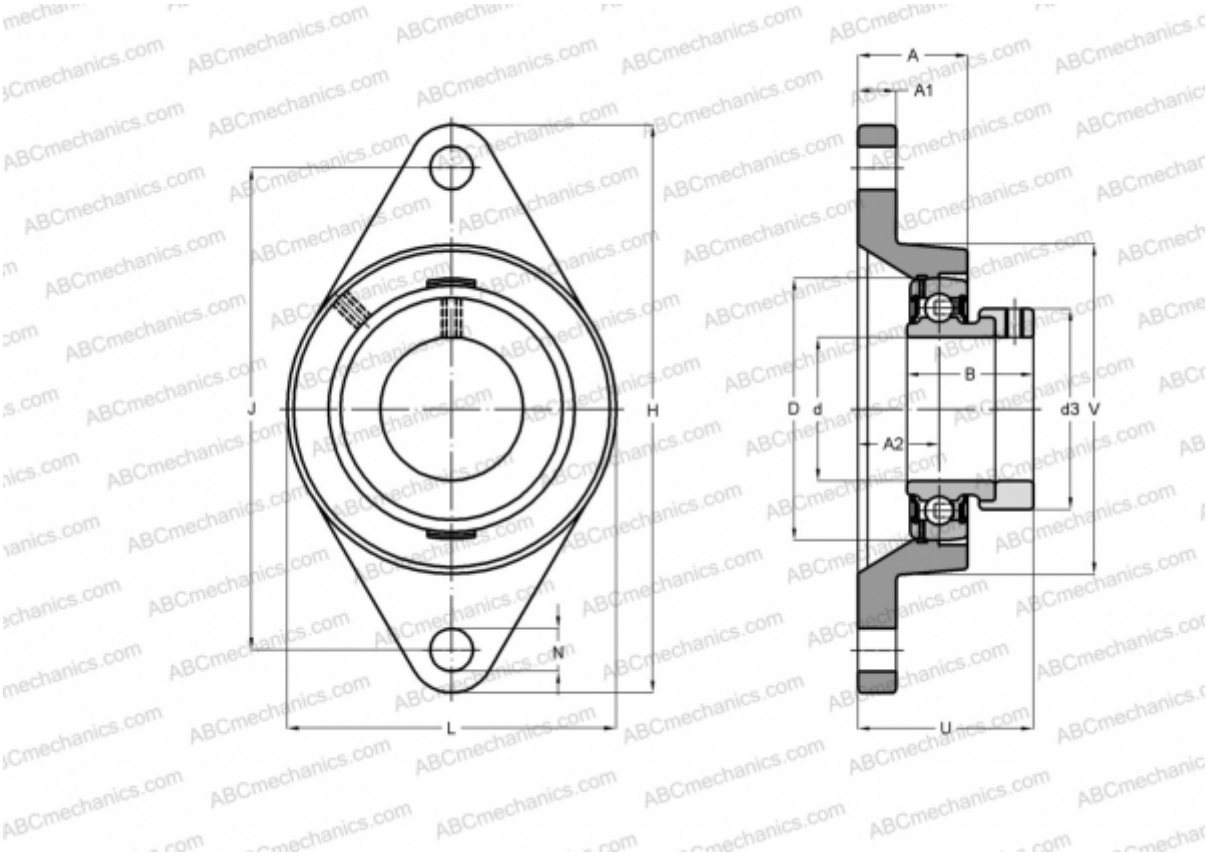

Technical specification

DIMENSIONS, MM	
d	20,000
D	47,000
B	31,000
L	61,000
H	112,000
A	28,000
J	90,000
A1	10,000
A2	19,000
N	11,500
d3	33,000
U	42,500
V	61,000
Q	Rp1/8

WEIGHT, KG	0,480
Bearing	GRAE20-NPP-B-
Housing	GG.CJT04-N-
Protective cover	KAS04

MANUFACTURER	INA

CALCULATION DATA	
Basic dynamic load rating, C	12,800 kN
Basic static load rating, Co	6,600 kN