RCJT40-N INA

Ball bearing units

TYPE: Housing units, Two-bolt flanged housing units, Cast iron housing, Radial insert ball bearing with eccentric locking collar, Type RCJT (INA)

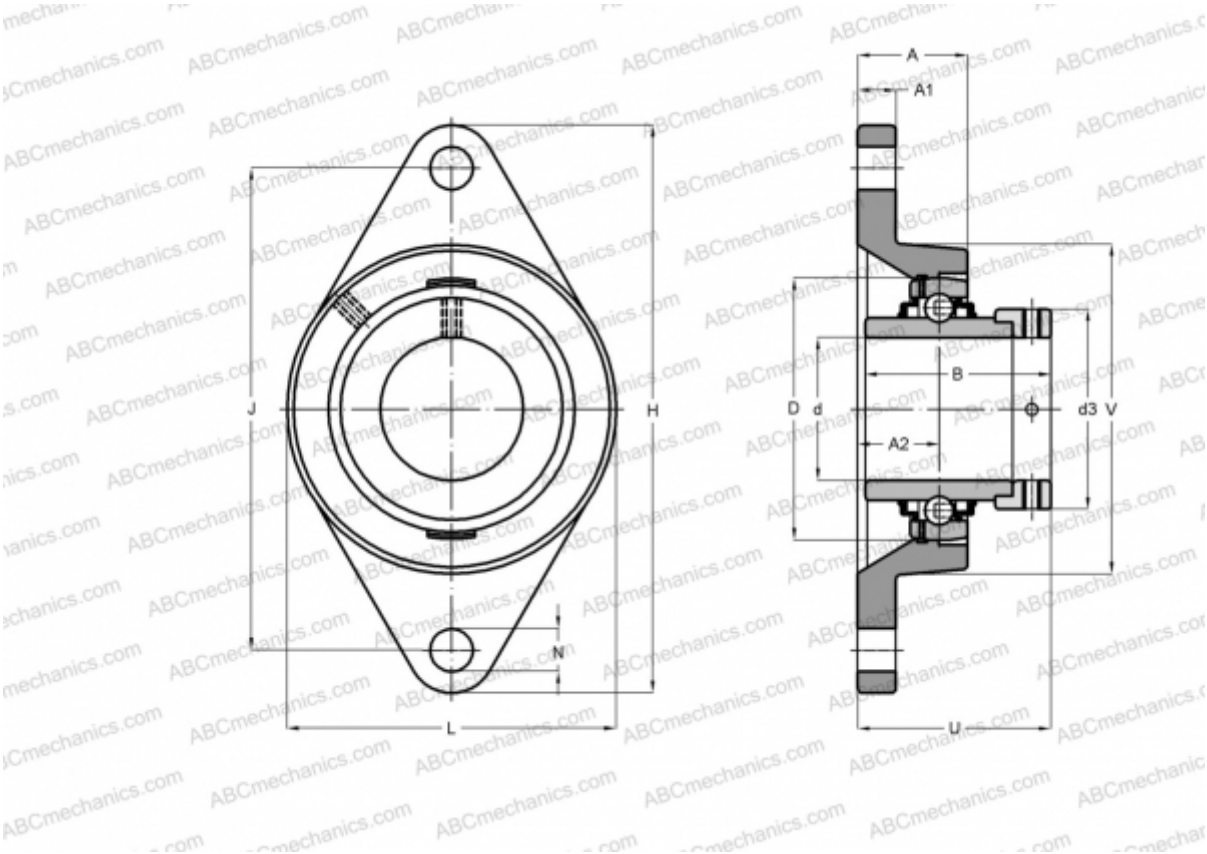

Technical specification

DIMENSIONS, MM	
d	40,000
D	80,000
B	56,500
L	105,000
H	172,000
A	34,500
J	143,500
A1	13,000
A2	24,000
N	14,000
d3	58,000
U	59,100
V	105,000
Q	Rp1/8

WEIGHT, KG	1,660
Bearing	GE40-KRR-B
Housing	GG.CJT08-N
Protective cover	KASK08
MANUFACTURER	INA

CALCULATION DATA	
Basic dynamic load rating, C	32,500 kN
Basic static load rating, Co	19,800 kN