LCJT30-N INA

Ball bearing units

TYPE: Housing units, Two-bolt flanged housing units, Cast iron housing, Radial insert ball bearing with eccentric locking collar, Type LCJT (INA)

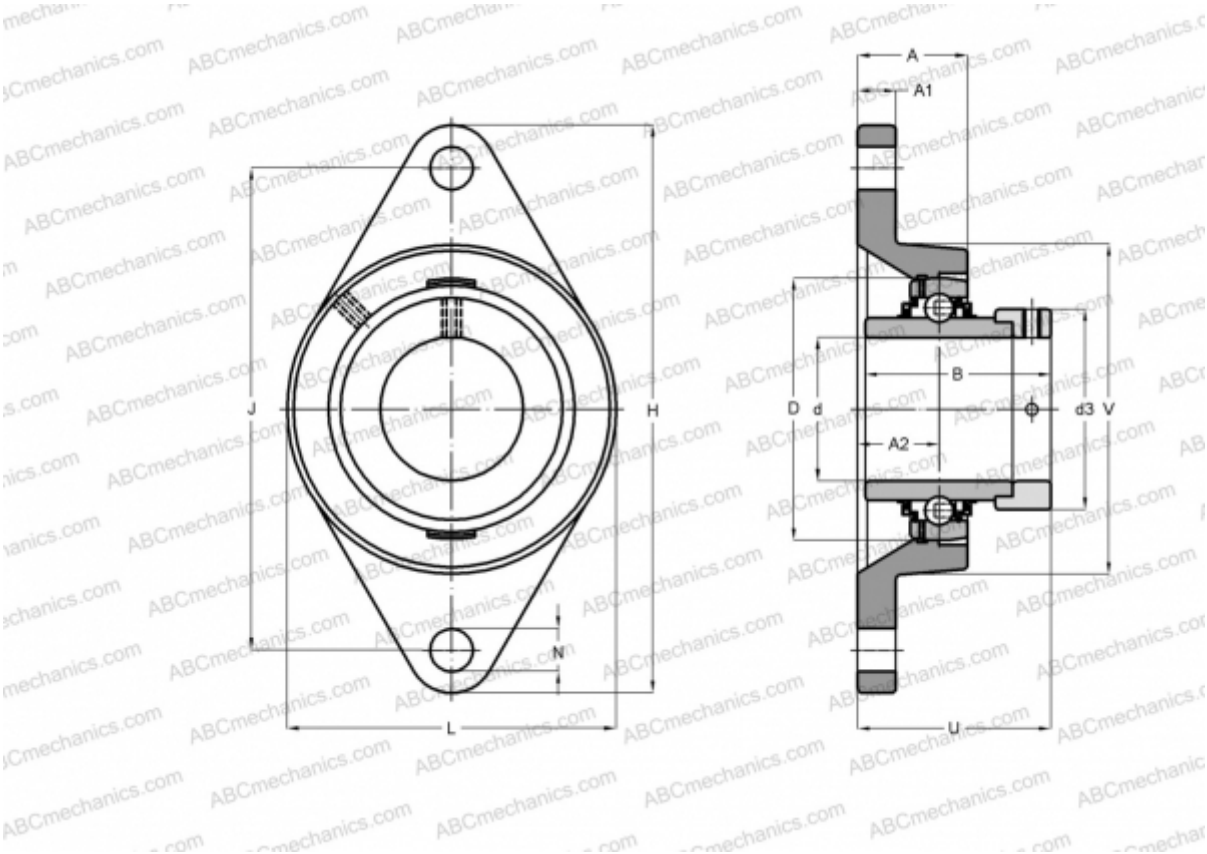

Technical specification

DIMENSIONS, MM	
d	30,000
D	62,000
B	48,500
L	80,000
H	142,000
A	29,000
J	116,500
A1	12,000
A2	20,000
N	11,500
d3	44,000
U	50,200
V	80,000
Q	Rp1/8

WEIGHT, KG	0,900
Bearing	GE30-KLL-B
Housing	GG.CJT06-N
Protective cover	KASK06
MANUFACTURER	INA

CALCULATION DATA	
Basic dynamic load rating, C	19,500 kN
Basic static load rating, Co	11,300 kN