RCJTZ35 INA

Ball bearing units

TYPE: Housing units, Two-bolt flanged housing units, Cast iron housing, Radial insert ball bearing with eccentric locking collar, Centring spigot, type RCJTZ (INA)

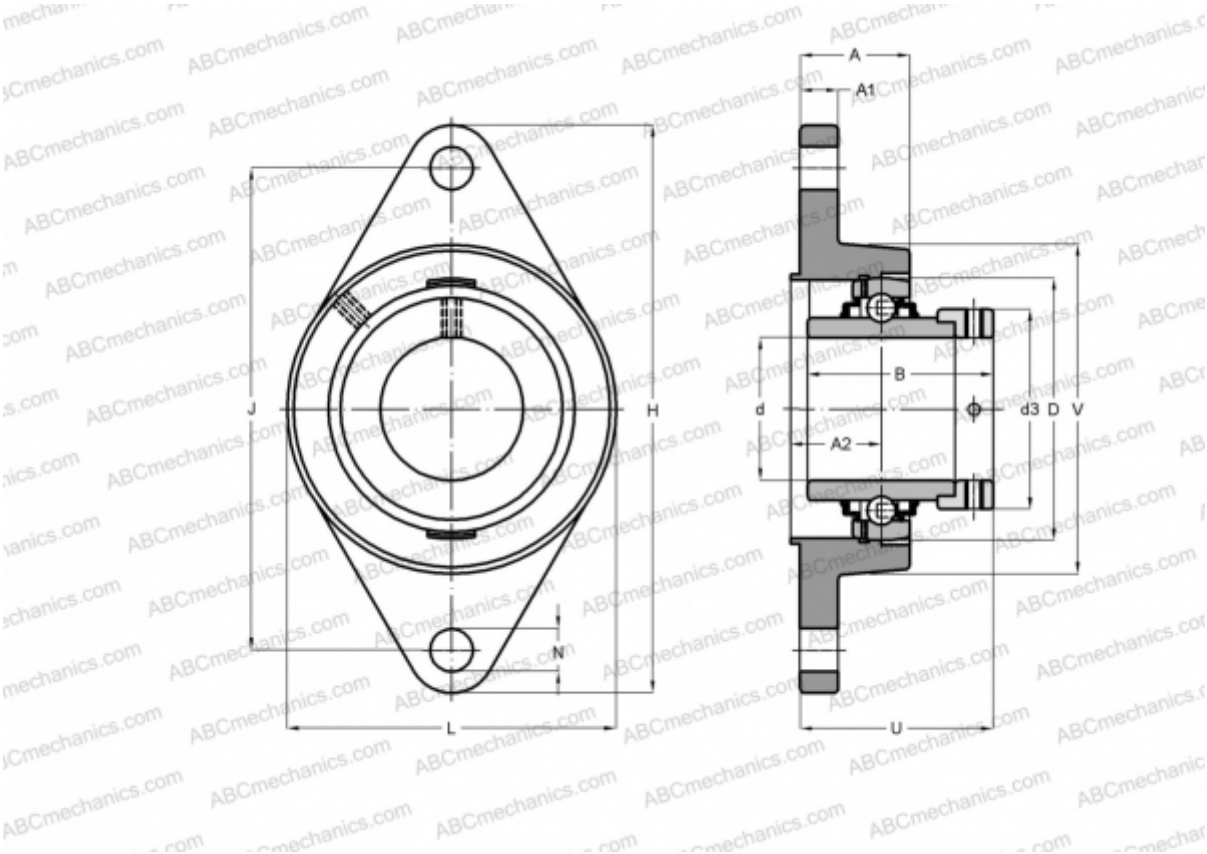

Technical specification

DIMENSIONS, MM	
d	35,000
D	72,000
B	51,300
L	94,000
H	155,000
A	26,500
J	51,300
A1	12,500
A2	17,000
N	14,000
d3	51,000
U	49,300
V	94,000
Q	Rp1/8

WEIGHT, KG	1,220
Bearing	GE35-KRR-B
Housing	GG.CJTZ07

MANUFACTURER	INA

CALCULATION DATA	
Basic dynamic load rating, C	25,500 kN
Basic static load rating, Co	15,300 kN