RCJTA35-N INA

Ball bearing units

TYPE: Housing units, Two-bolt flanged housing units, Cast iron housing, Radial insert ball bearing with adapter sleeve, Type RCJTA (INA)

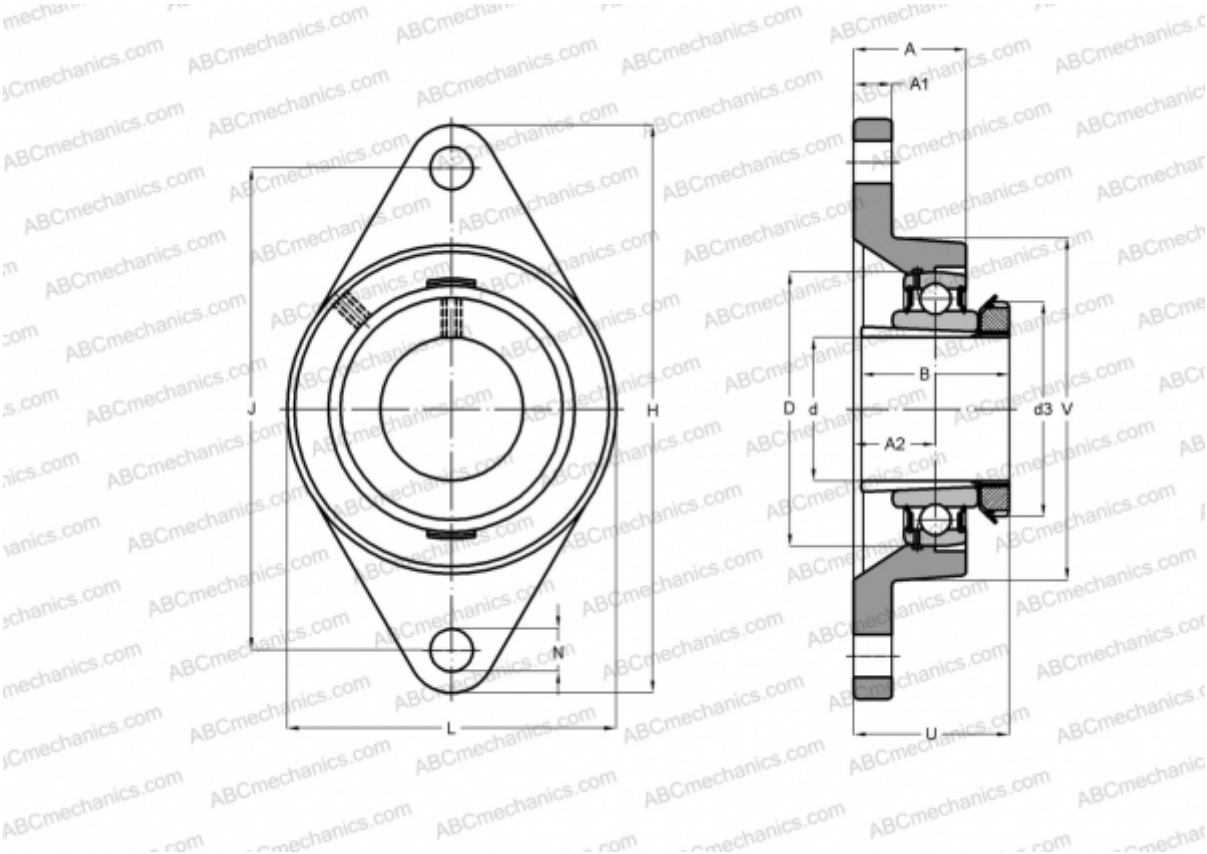

Technical specification

DIMENSIONS, MM	
d	35,000
D	72,000
B	34,000
L	92,000
H	155,000
A	30,500
J	130,000
A1	12,500
A2	21,000
N	14,000
d3	52,000
U	46,000
V	92,000
Q	Rp1/8

WEIGHT, KG	1,060
Bearing	GSH35-2RSR-B
Housing	GG.CJT07-N
Protective cover	KASK07
MANUFACTURER	INA

CALCULATION DATA	
Basic dynamic load rating, C	24,900 kN
Basic static load rating, Co	15,300 kN