RAT17 INA

Ball bearing units

TYPE: Housing units, Two-bolt flanged housing units, Sheet steel housing, Radial insert ball bearing with eccentric locking collar, Type RAT (INA)

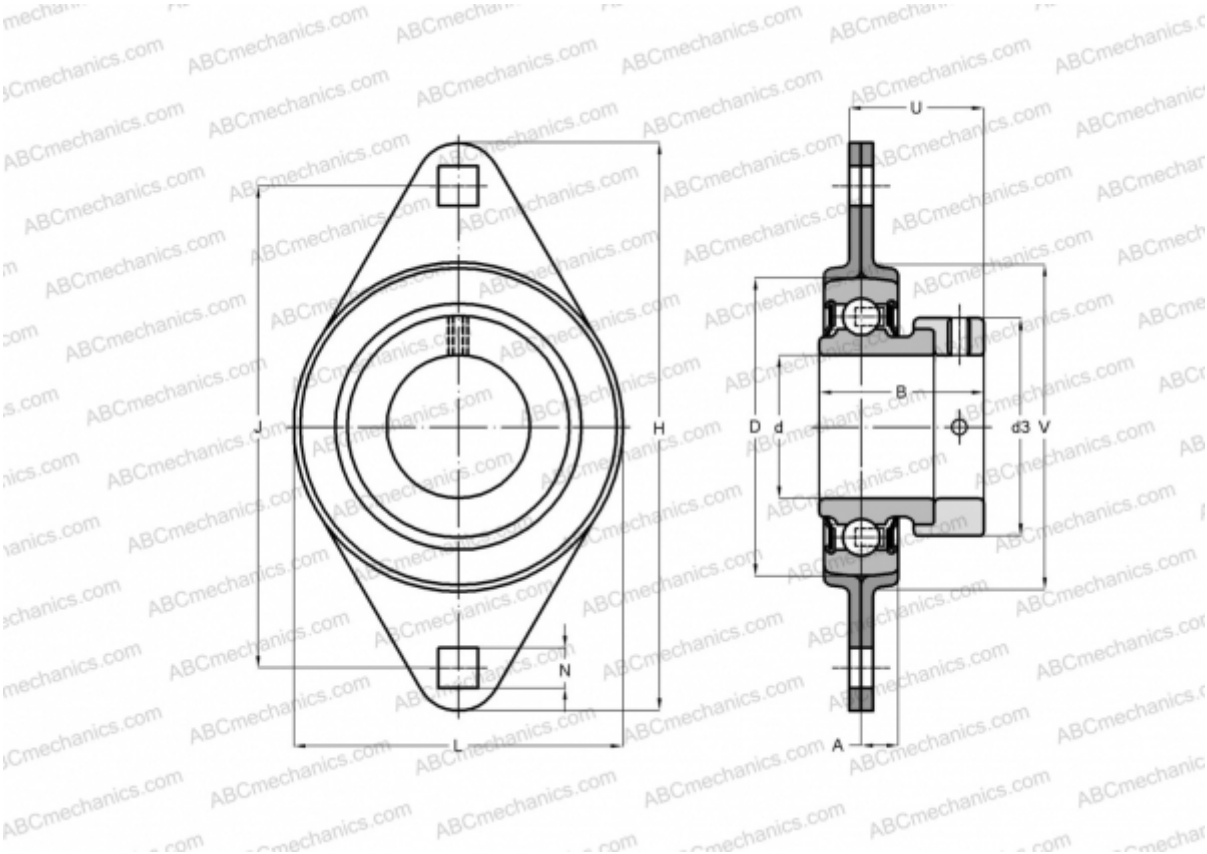

Technical specification

DIMENSIONS, MM	
d	17,000
D	40,000
B	28,600
L	58,700
H	81,000
A	7,000
J	63,500
N	7,100
d3	28,000
U	24,000
V	48,000
WEIGHT, KG	0,190
Bearing	RAE17-NPP-B
Housing	FLAN40-MST x 2
MANUFACTURER	INA

CALCULATION DATA	
Basic dynamic load rating, C	9,800 kN
Basic static load rating, Co	4,750 kN