RAT20 INA

Ball bearing units

TYPE: Housing units, Two-bolt flanged housing units, Sheet steel housing, Radial insert ball bearing with eccentric locking collar, Type RAT (INA)

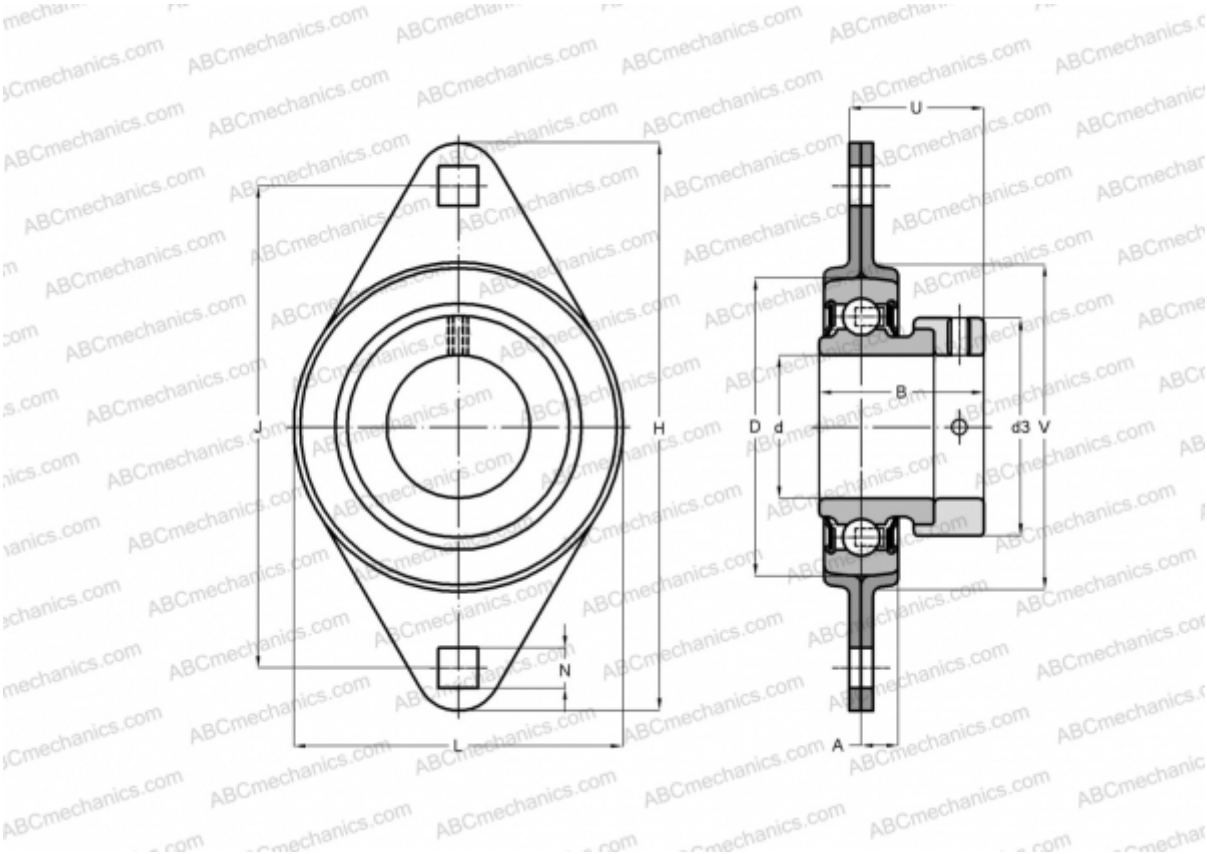

Technical specification

DIMENSIONS, MM	
d	20,000
D	47,000
B	31,000
L	66,000
H	90,500
A	8,000
J	71,500
N	8,700
d3	33,000
U	25,500
V	55,000
WEIGHT, KG	0,270
Bearing	RAE20-NPP-B
Housing	FLAN47-MST x 2
MANUFACTURER	INA

CALCULATION DATA	
Basic dynamic load rating, C	12,800 kN
Basic static load rating, Co	6,600 kN