PCFTR35 INA

Ball bearing units

TYPE: Housing units, Three-bolt flanged housing units, Cast iron housing, Radial insert ball bearing with eccentric locking collar, Type PCFTR (INA)

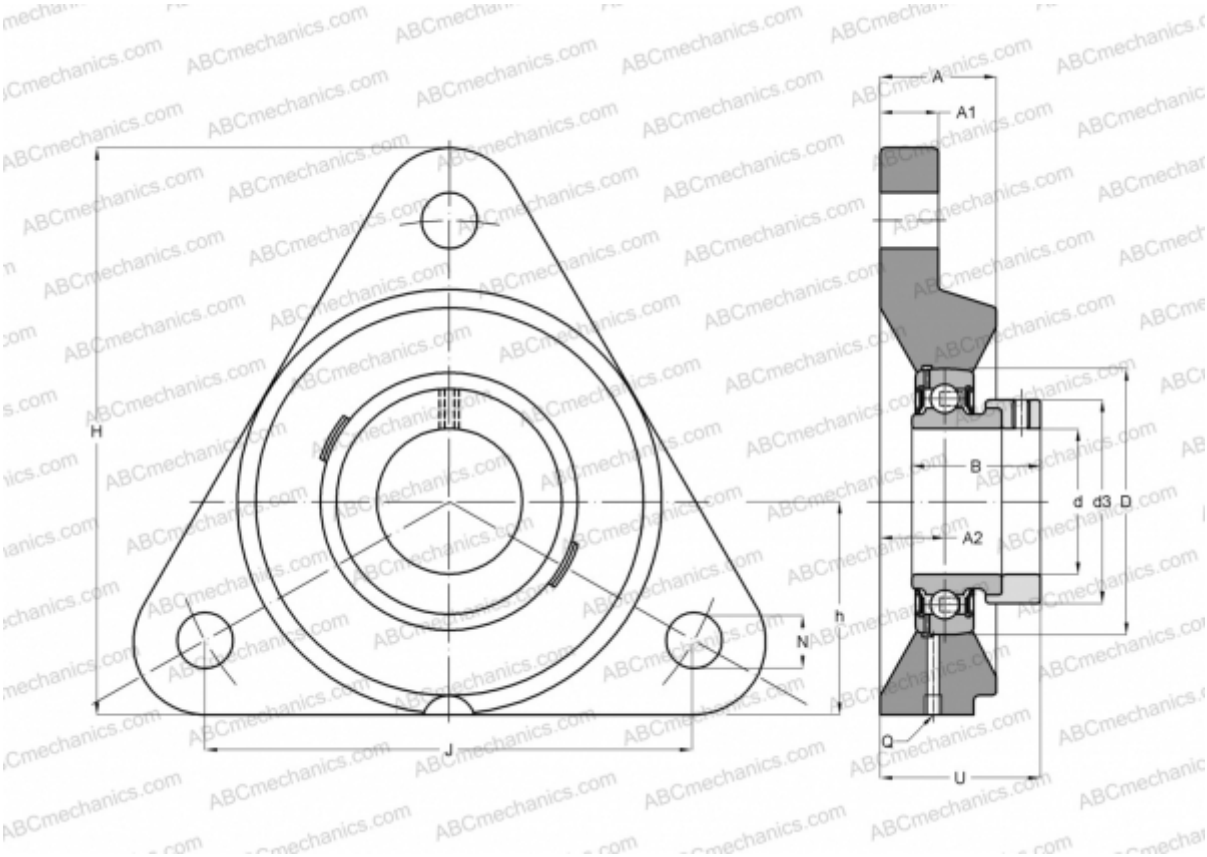

Technical specification

DIMENSIONS, MM	
d	35,000
D	72,000
B	39,000
H	128,000
A	27,000
J	129,700
A1	14,000
A2	15,600
N	14,000
d3	51,000
U	45,100
h	48,000
Q	Rp1/8
WEIGHT, KG	1,340

Bearing	GRAE35-NPP-B
Housing	GG.CFTR07
MANUFACTURER	INA

CALCULATION DATA	
Basic dynamic load rating, C	25,500 kN
Basic static load rating, Co	15,300 kN