PCFTR45 INA

Ball bearing units

TYPE: Housing units, Three-bolt flanged housing units, Cast iron housing, Radial insert ball bearing with eccentric locking collar, Type PCFTR (INA)

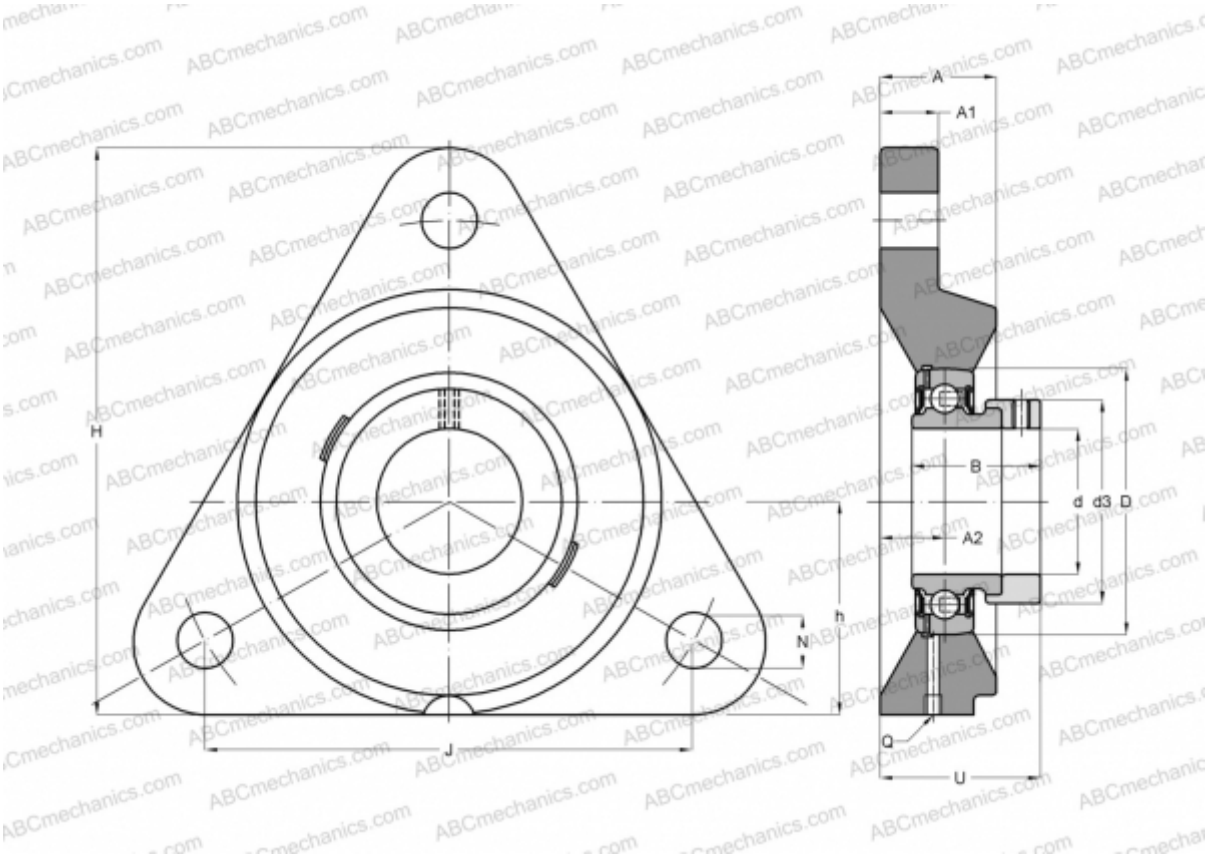

Technical specification

DIMENSIONS, MM	
d	45,000
D	85,000
B	43,800
H	150,000
A	33,000
J	160,000
A1	16,000
A2	19,200
N	14,000
d3	63,000
U	51,900
h	55,000
Q	Rp1/8
WEIGHT, KG	2,000

Bearing	GRAE45-NPP-B
Housing	GG.CFTR09
MANUFACTURER	INA
CALCULATION DATA	
Basic dynamic load rating, C	32,500 kN
Basic static load rating, Co	20,400 kN