RATRY30 INA

Ball bearing units

TYPE: Housing units, Three-bolt flanged housing units, Sheet steel housing, Radial insert ball bearing with grub screws in inner ring, Type RATRY (INA)

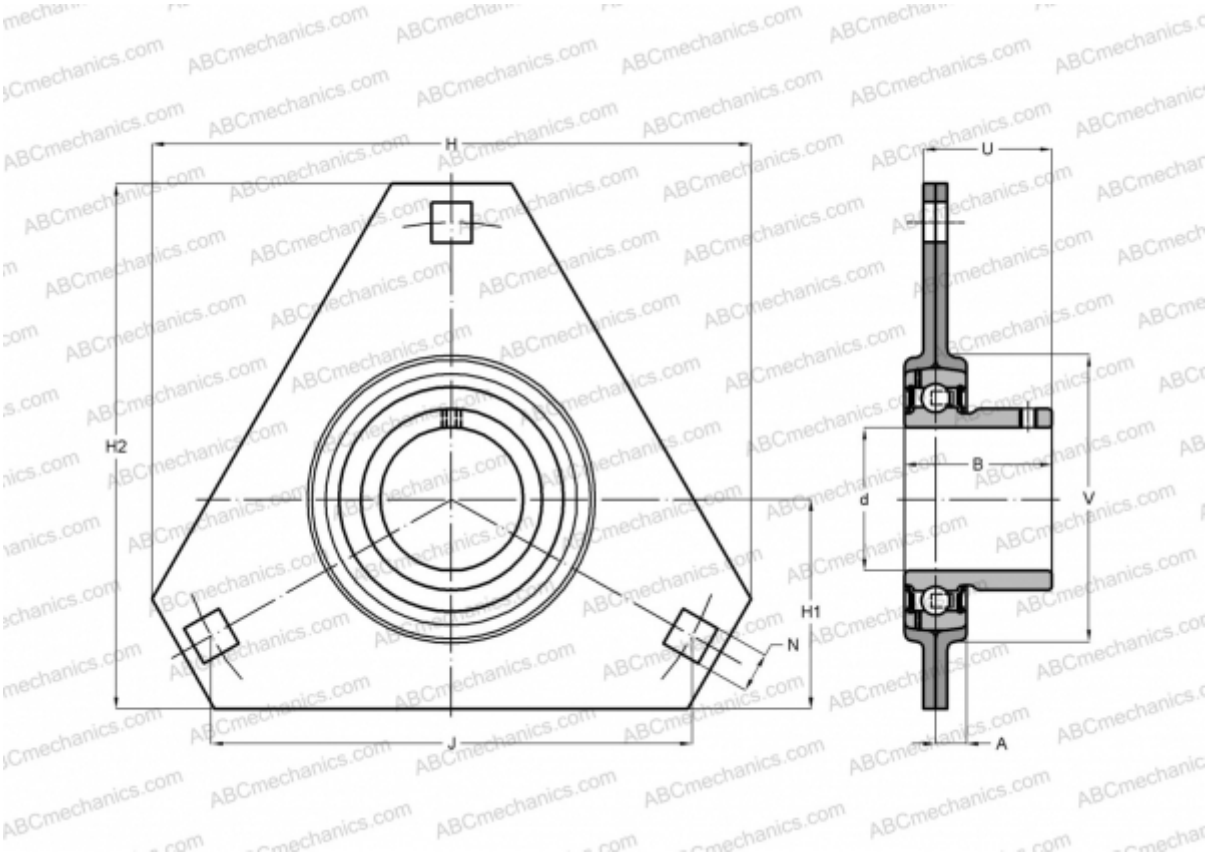

Technical specification

DIMENSIONS, MM	
d	30,000
D	62,000
B	30,000
H	112,700
A	8,700
H2	93,000
J	90,500
H1	38,100
N	10,500
U	23,500
V	71,000
WEIGHT, KG	0,410
Bearing	AY30-NPP-B
Housing	FLAN62-MSTR x 2
MANUFACTURER	INA

CALCULATION DATA	
Basic dynamic load rating, C	19,500 kN
Basic static load rating, Co	11,300 kN