GRRY20-VA INA

Ball bearing units

TYPE: Housing units, Three/four-bolt flanged housing units, Sheet steel housing, Radial insert ball bearing with grub screws in inner ring, Anti-corrosion protection, type GRRY..-VA (INA)

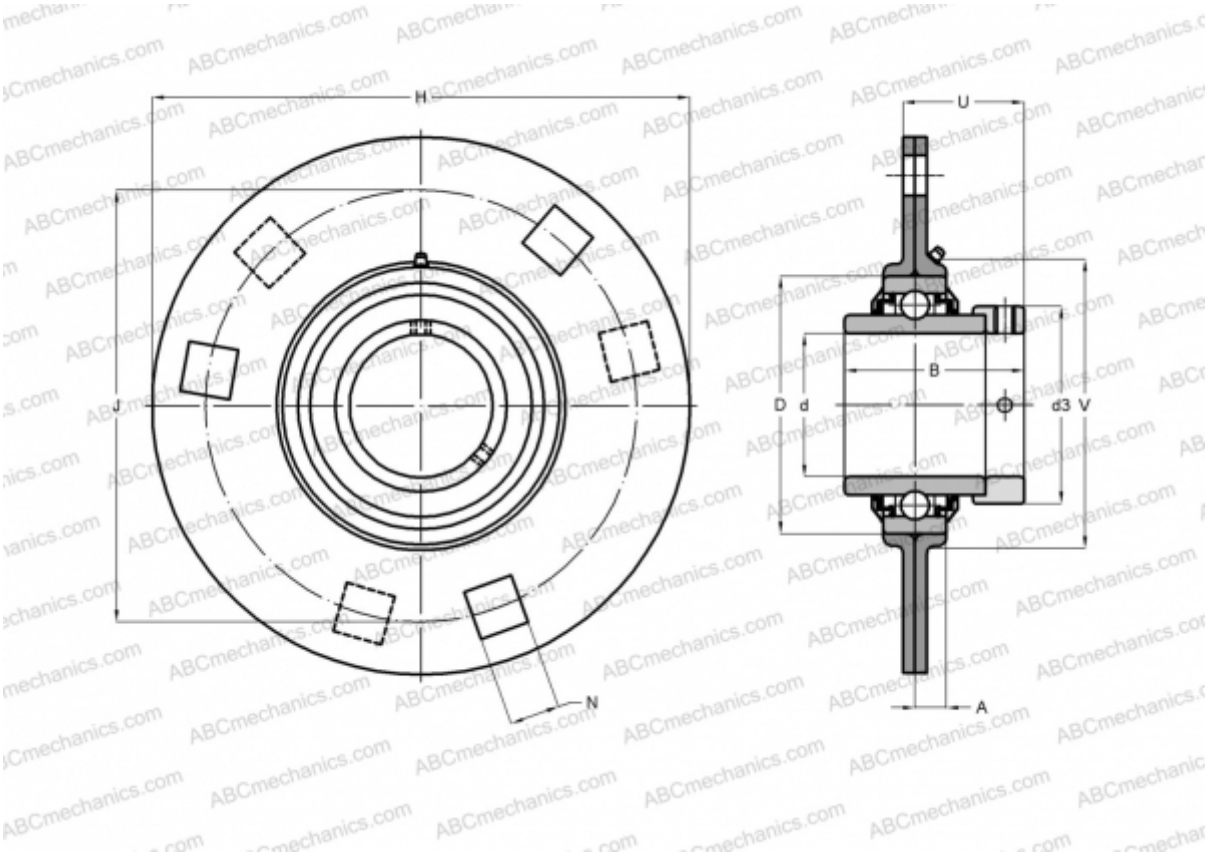

Technical specification

DIMENSIONS, MM	
d	20,000
D	47,000
B	31,000
H	90,500
A	8,000
J	71,500
N	8,700
U	20,300
V	55,000
WEIGHT, KG	0,340
Bearing	GYE20-KRR-B-
Housing	FLAN47-MSB-VA/FLAN47-MSA-VA x 1

MANUFACTURER	INA
CALCULATION DATA	
Basic dynamic load rating, C	12,800 kN
Basic static load rating, Co	6,600 kN