PCJ17 INA

Ball bearing units

TYPE: Housing units, Four-bolt flanged housing units, Cast iron housing, Radial insert ball bearing with eccentric locking collar, Type PCJ (INA)

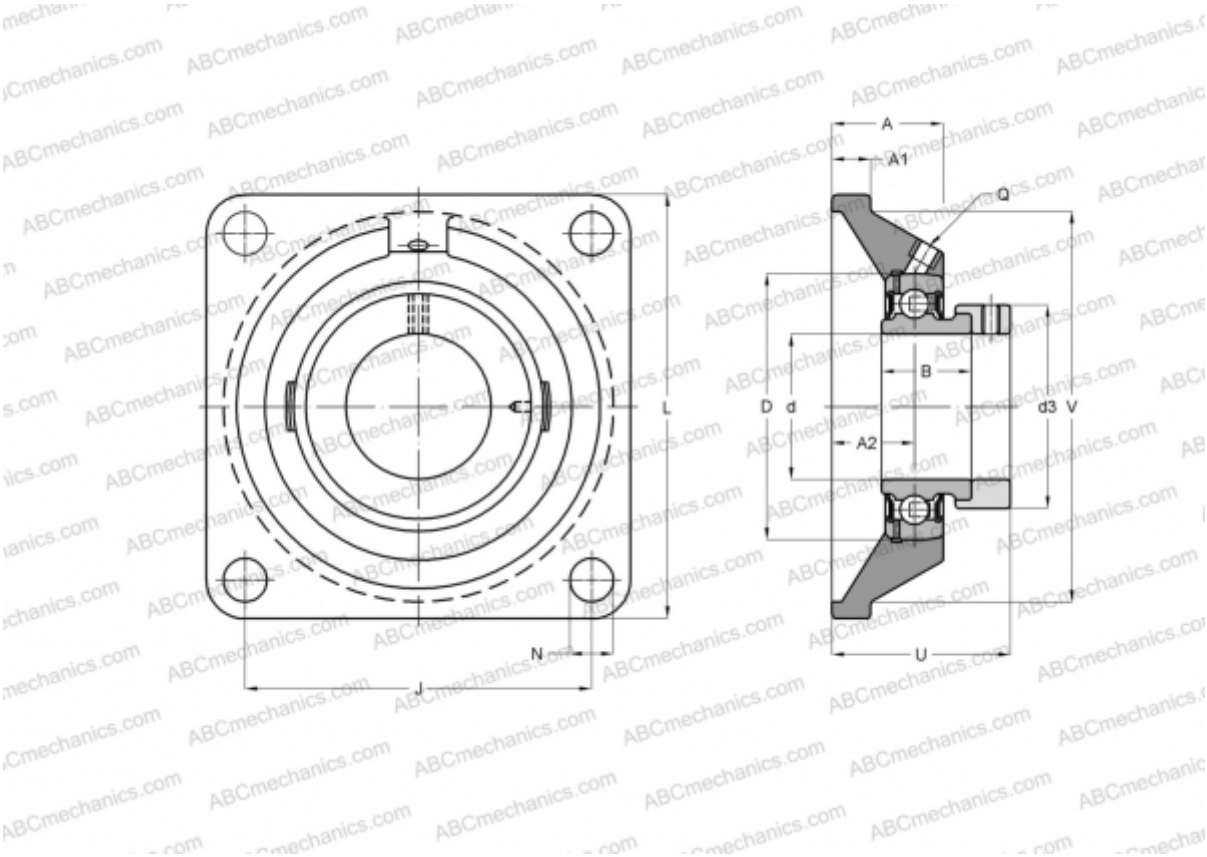

Technical specification

DIMENSIONS, MM	
d	17,000
D	40,000
B	28,600
L	76,000
A	27,000
J	54,000
A1	9,500
A2	17,000
N	11,500
d3	28,000
U	39,100
V	58,000
Q	M6
WEIGHT, KG	0,520

Bearing	GRAE17-NPP-B
Housing	GG.CJ03
MANUFACTURER	INA
CALCULATION DATA	
Basic dynamic load rating, C	9,800 kN
Basic static load rating, Co	4,750 kN