PCJ30-N INA

Ball bearing units

TYPE: Housing units, Four-bolt flanged housing units, Cast iron housing, Radial insert ball bearing with eccentric locking collar, Type PCJ (INA)

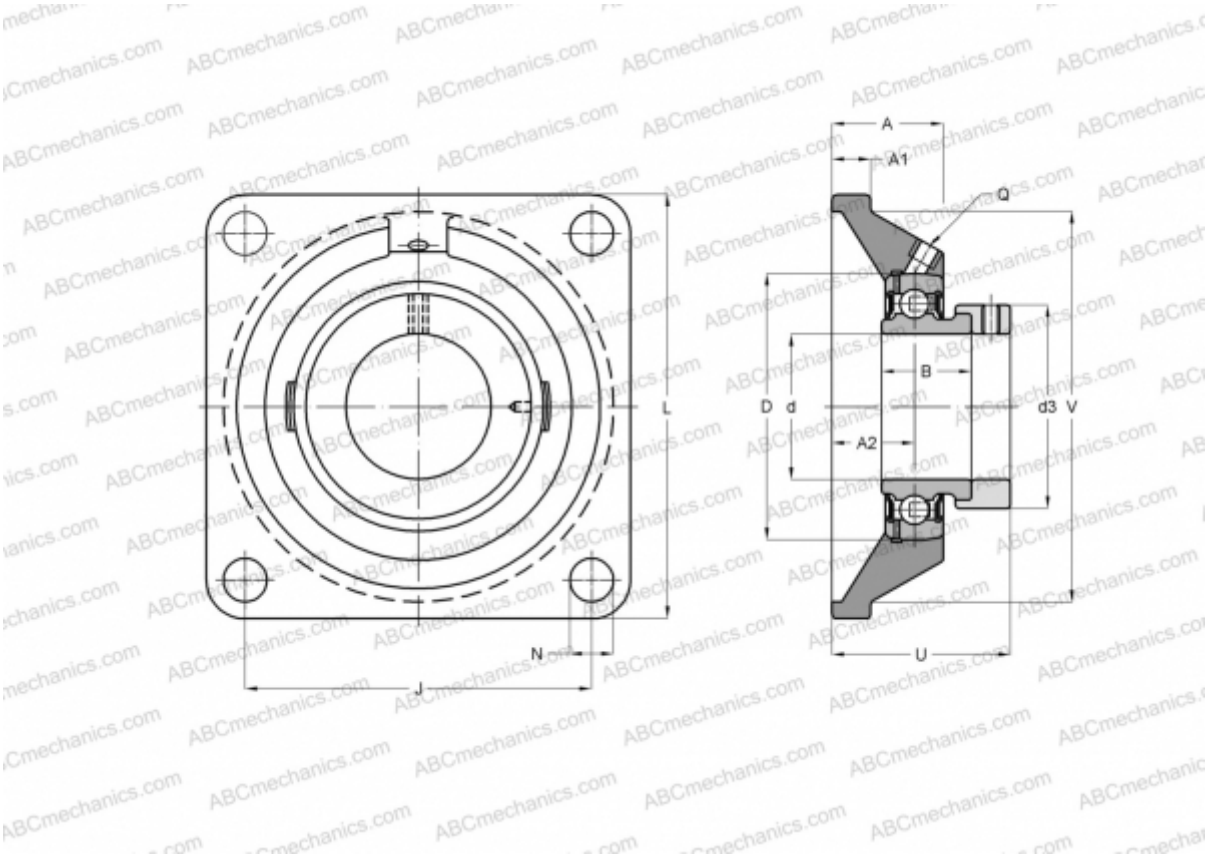

Technical specification

DIMENSIONS, MM	
d	30,000
D	62,000
B	35,800
L	108,000
A	29,000
J	82,500
A1	12,000
A2	20,000
N	11,500
d3	44,000
U	46,800
V	85,000
Q	Rp1/8
WEIGHT, KG	1,110

Bearing	GRAE30-NPP-B
Housing	GG.CJ06-N
MANUFACTURER	INA
CALCULATION DATA	
Basic dynamic load rating, C	19,500 kN
Basic static load rating, Co	11,300 kN