PCJ45-FA125 INA

Ball bearing units

TYPE: Housing units, Four-bolt flanged housing units, Cast iron housing, Radial insert ball bearing with eccentric locking collar, Type PCJ (INA), coated with CORROTECT

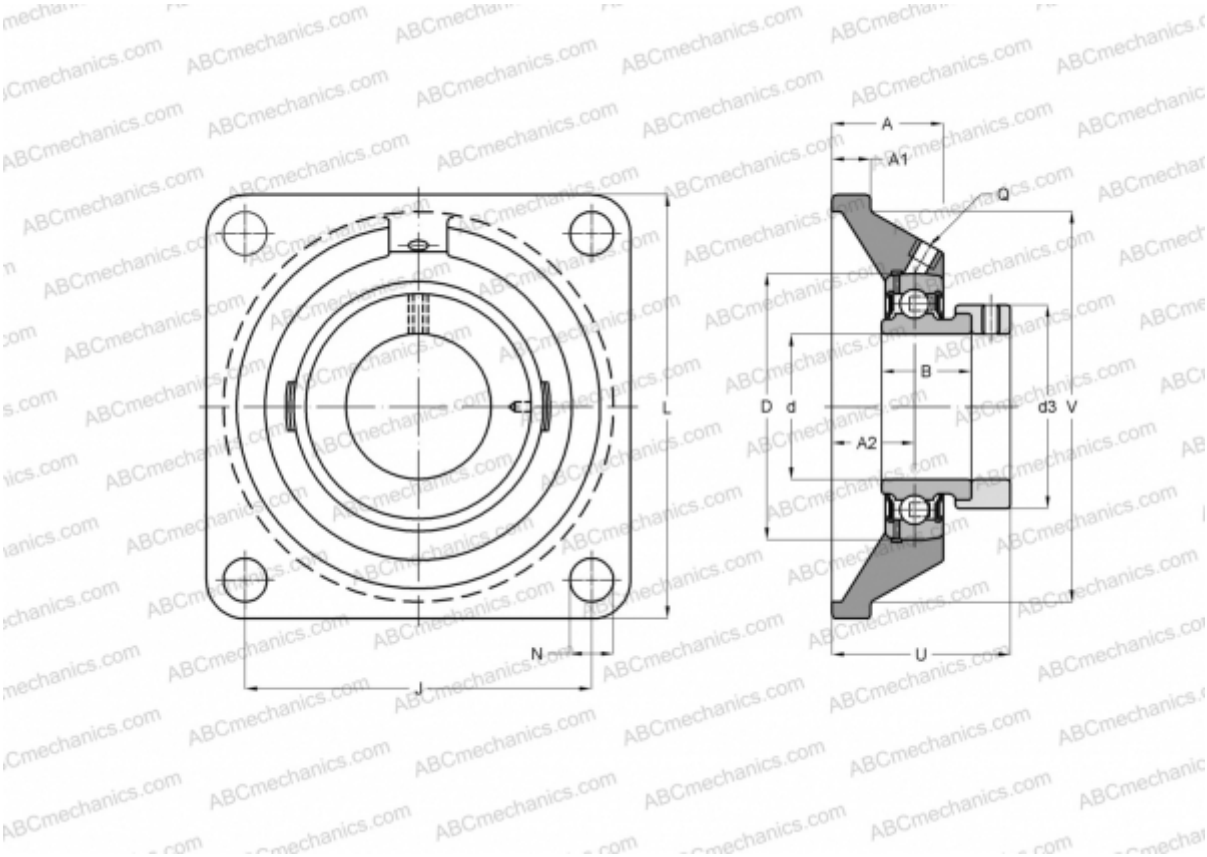

Technical specification

DIMENSIONS, MM	
d	45,000
D	85,000
B	43,800
L	137,000
A	35,000
J	105,000
A1	13,000
A2	24,000
N	14,000
d3	63,000
U	56,700
V	116,000
Q	Rp1/8
WEIGHT, KG	2,220

Bearing	GRAE45-NPP-B-
Housing	GG.CJ09-FA125.1
MANUFACTURER	INA

CALCULATION DATA	
Basic dynamic load rating, C	32,500 kN
Basic static load rating, Co	20,400 kN