RCJO70 INA

Ball bearing units

TYPE: Housing units, Four-bolt flanged housing units, Cast iron housing, Radial insert ball bearing with eccentric locking collar, Type RCJO (INA)

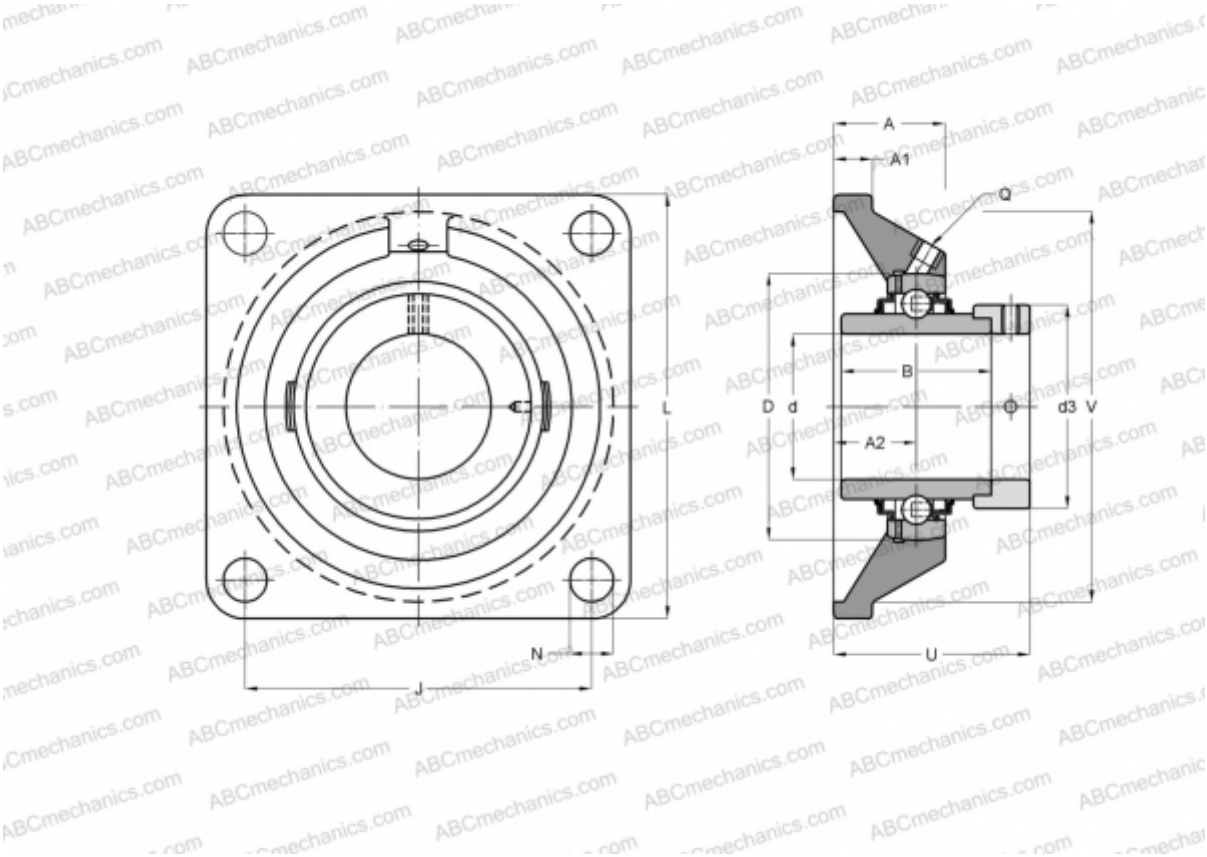

Technical specification

DIMENSIONS, MM	
d	70,000
D	150,000
B	75,400
L	226,000
A	54,500
J	178,000
A1	25,000
A2	36,000
N	25,000
d3	102,000
U	85,400
V	196,000
Q	Rp1/8
WEIGHT, KG	10,000

Bearing	GNE70-KRR-B
Housing	GG.CJO14
MANUFACTURER	INA
CALCULATION DATA	
Basic dynamic load rating, C	104,000 kN
Basic static load rating, Co	68,000 kN