PME30-N INA

Ball bearing units

TYPE: Housing units, Four-bolt flanged housing units, Cast iron housing, Radial insert ball bearing with eccentric locking collar, Centring spigot, type PME (INA)

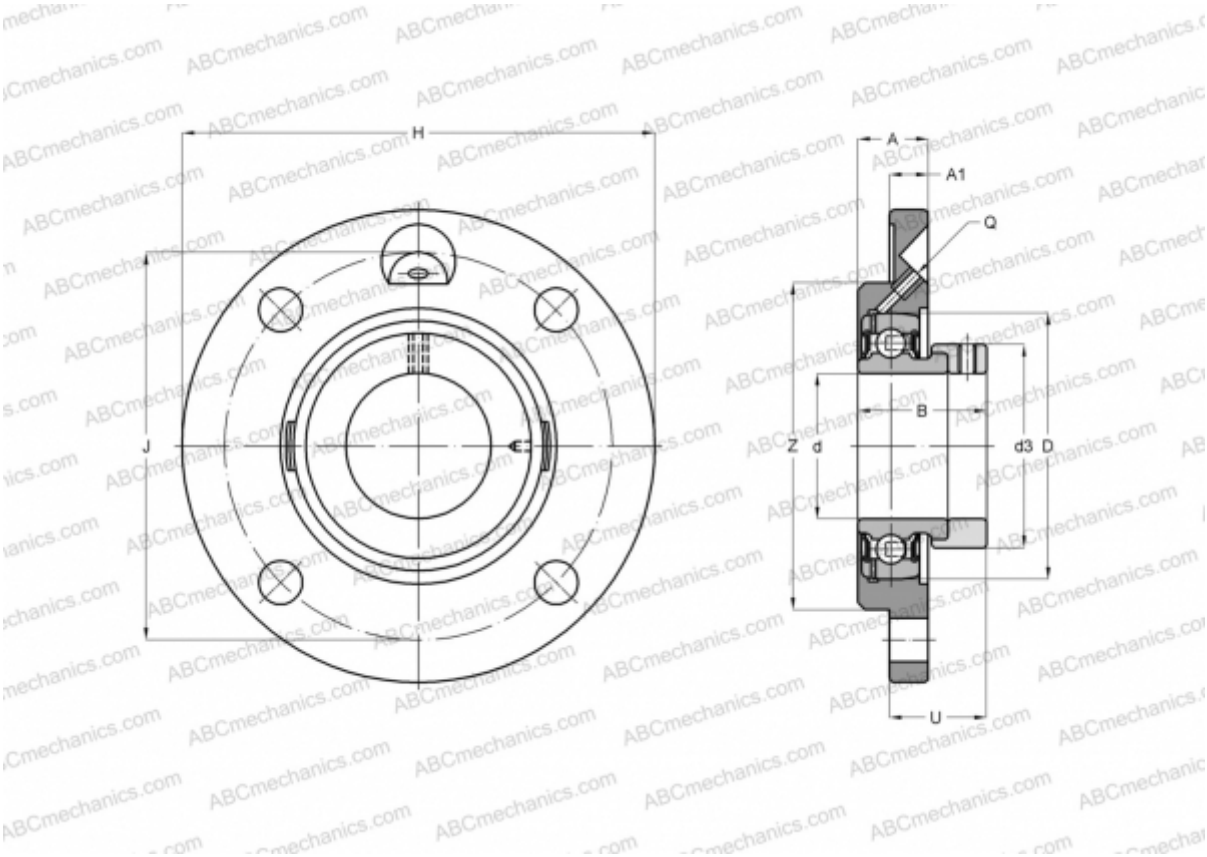

Technical specification

DIMENSIONS, MM	
d	30,000
D	62,000
B	35,800
H	125,000
A	20,500
J	100,000
A1	9,500
N	11,500
d3	44,000
U	24,700
Z	80,000
Q	M6
WEIGHT, KG	0,970

Bearing	GRAE30-NPP-B
Housing	GG.ME06-N
Protective cover	KASK06
MANUFACTURER	INA
CALCULATION DATA	
Basic dynamic load rating, C	19,500 kN
Basic static load rating, Co	11,300 kN