RME40-N INA

Ball bearing units

TYPE: Housing units, Four-bolt flanged housing units, Cast iron housing, Radial insert ball bearing with eccentric locking collar, Centring spigot, type RME (INA)

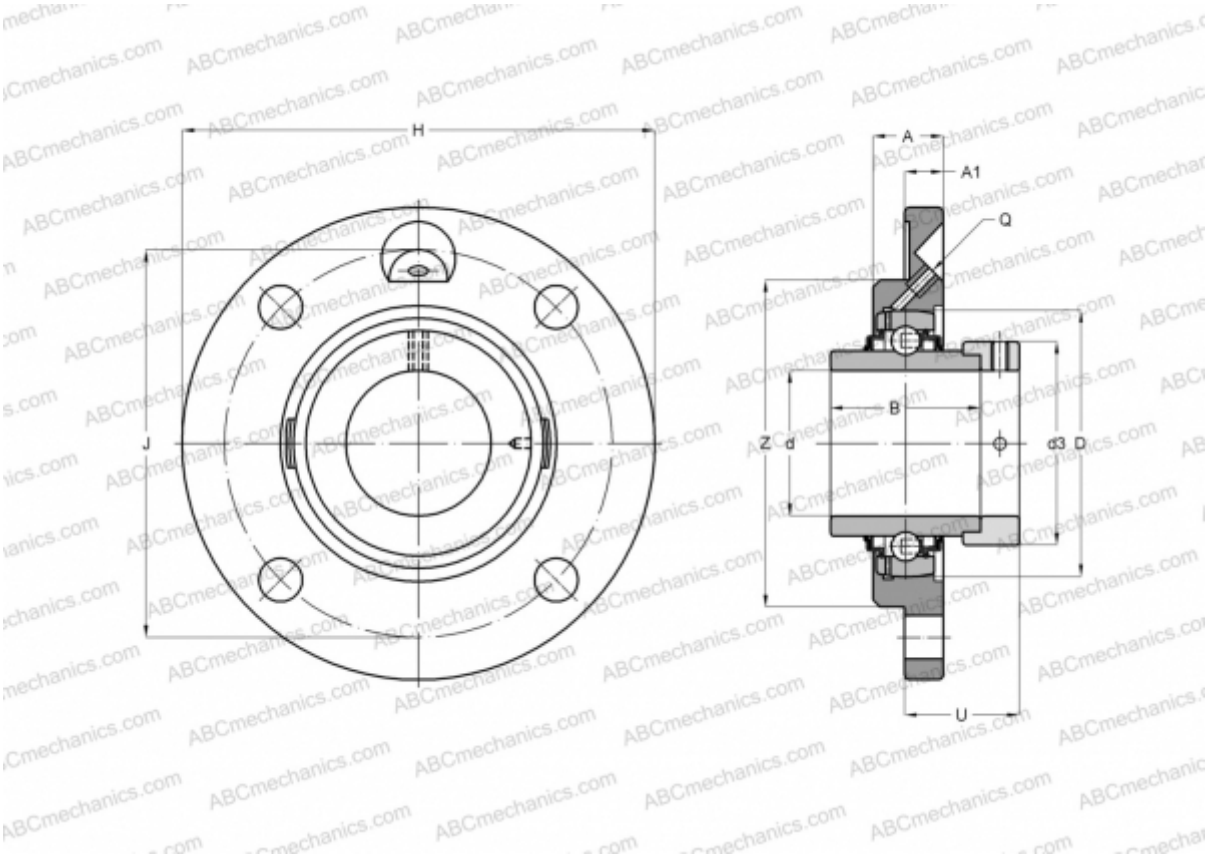

Technical specification

DIMENSIONS, MM	
d	40,000
D	80,000
B	56,500
H	145,000
A	23,000
J	120,000
A1	11,500
N	11,500
d3	58,000
U	33,900
Z	100,000
Q	M6
WEIGHT, KG	1,740

Bearing	GE40-KRR-B
Housing	GG.ME08-N
Protective cover	KASK08
MANUFACTURER	INA
CALCULATION DATA	
Basic dynamic load rating, C	32,500 kN
Basic static load rating, Co	19,800 kN