RMEO60 INA

Ball bearing units

TYPE: Housing units, Four-bolt flanged housing units, Cast iron housing, Radial insert ball bearing with eccentric locking collar, Centring spigot, type RMEO (INA)

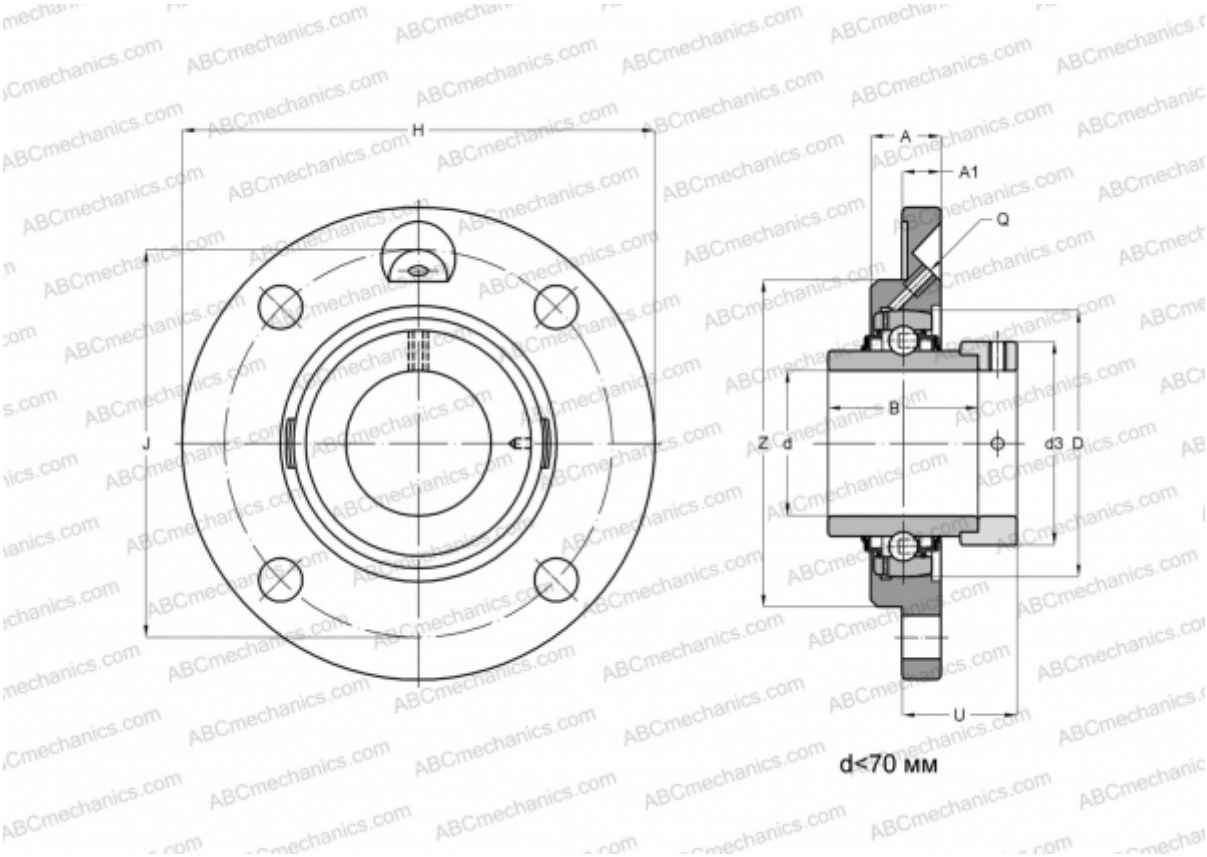

Technical specification

DIMENSIONS, MM	
d	60,000
D	130,000
B	68,400
H	256,000
A	36,000
J	212,000
A1	22,000
N	23,000
d3	89,000
U	47,900
Z	160,000
Q	Rp1/8
WEIGHT, KG	6,000

Bearing	GNE60-KRR-B
Housing	GG.MEO12
MANUFACTURER	INA
CALCULATION DATA	
Basic dynamic load rating, C	82,000 kN
Basic static load rating, Co	52,000 kN