TME35-N INA

Ball bearing units

TYPE: Housing units, Four-bolt flanged housing units, Cast iron housing, Radial insert ball bearing with eccentric locking collar, Centring spigot, type TME (INA)

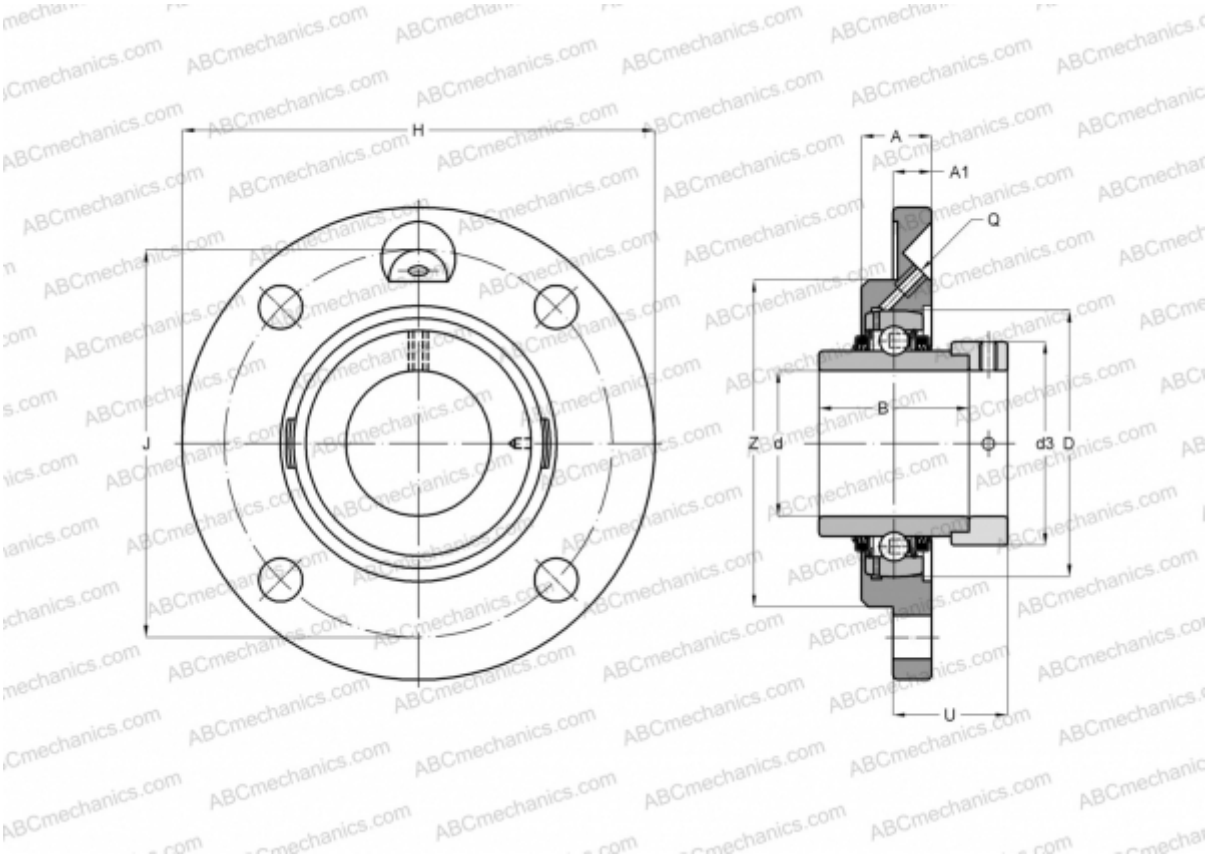

Technical specification

DIMENSIONS, MM	
d	35,000
D	72,000
B	51,300
H	135,000
A	20,500
J	110,000
A1	10,000
N	11,500
d3	51,000
U	31,300
Z	90,000
Q	M6
WEIGHT, KG	1,350

Bearing	GE35-KTT-B
Housing	GG.ME07-N
Protective cover	KASK07
MANUFACTURER	INA

CALCULATION DATA	
Basic dynamic load rating, C	25,500 kN
Basic static load rating, Co	15,300 kN